MERRYCHEF®

Project _____

Item _____

Quantity _____

CSI Section 11400

Approved _____

Date _____

High Speed Oven

Merrychef conneX® 12

Stainless steel



Carbon black



Features

- The conneX®12 is the most versatile, high speed oven on the market.
- An all-in-one unit ideally suited to rapidly cook, toast, grill and reheat fresh or frozen food, eliminating the need for other appliances.
- Cooking up to 20x faster than other cooking methods it can provide hot food on demand.
- It has the largest cavity 30.5cm x 30.5cm (12" x 12") to oven width 35.5mm (14") ratio, and fits on a 600mm worktop, perfect when space is at a premium.
- Suitable for front-of-house, operating quietly and easy to install due to ventless cooking capabilities through a built-in catalytic converter, eliminates the need for an extraction fan.
- Cool to touch exterior makes it safe to locate anywhere with no need to allow space around the unit.
- Easy to operate with a 7" HD widescreen display and new generation easyTouch®2.0, icon driven controller, ensuring consistent, high quality dishes.
- Stainless steel cavity and casework, with a sealed rounded edged cavity makes it easy to clean.
- Patented easy access front mounted monitored air filter.
- Wi-fi/ethernet connected with access to KitchenConnect cloud for easy menu updates (or, via a USB memory stick).

Options

- Stainless steel or carbon black finishes. Highly robust glass surrounds the easyTouch® 2.0 controller.

Included accessories

- Flat cook plate.
- Guarded hand paddle with supporting side walls.
- Cooking tray, full size.
- Cool down pan.
- Cook plate liner.

For a wide range of accessories recommended to get greater flexibility out of the conneX®12 and significantly reduce cleaning time visit **www.merrychef.com/products/accessories**

Specifications

High speed Technology® combines three heat technologies:
-Microwave
-Convection
-Tuned impingement.

MICROWAVE POWER

- Microwave setting options: Off and 5-100% in 1% increments.
- Microwave distribution system uses a rotating active antenna to ensure even heating throughout the food.

CONVECTED HEAT

- Temperature setting options: Off and 212°F (100°C) to 527°F (275°C) in 1°C increments.
- The Heat distribution system is via Tuned Impingement, ensuring the most even browning.

VENTILATION

- Ventless certification. EPA 202 tested (8 hr).
- Internal catalytic filtration to limit grease and odour emissions.

easyTouch® 2.0 CONTROL SYSTEM

- Icon driven, HD colour touch screen control panel with unlimited storage for multi-stage cooking profiles.
- Each cooking profile offers up to six (6) stages with programmable cooking times, microwave power settings and written and/or pictorial user instructions for each stage.
- Self diagnostics capability to monitor components.
- Easy menu updates or data transfer via USB memory stick and KitchenConnect cloud.

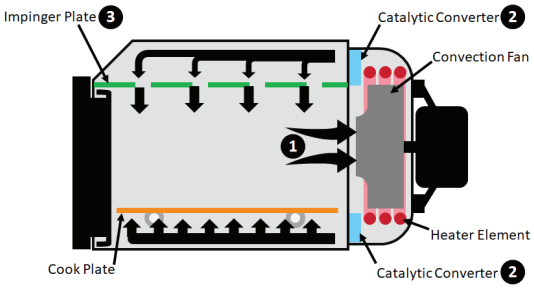

HOW IT WORKS

The convection fan pulls air in through the back of the cavity (1). This is then heated and returned to the cavity through the catalytic converters (2) and impinger plate (3) to produce an even heat pattern in the oven. This heat pattern allows food to cook evenly and produces a crisp golden finish, every time.

Merrychef conneX® 12

Welbilt UK Limited,
Ashbourne House, The Guildway
Old Portsmouth Road,
Guildford, GU3 1LR,
United Kingdom

Email: Merrychef.marketing@welbilt.com

Tel: 00 44 1483 464 900

www.merrychef.com

© 2026 Merrychef U.K.

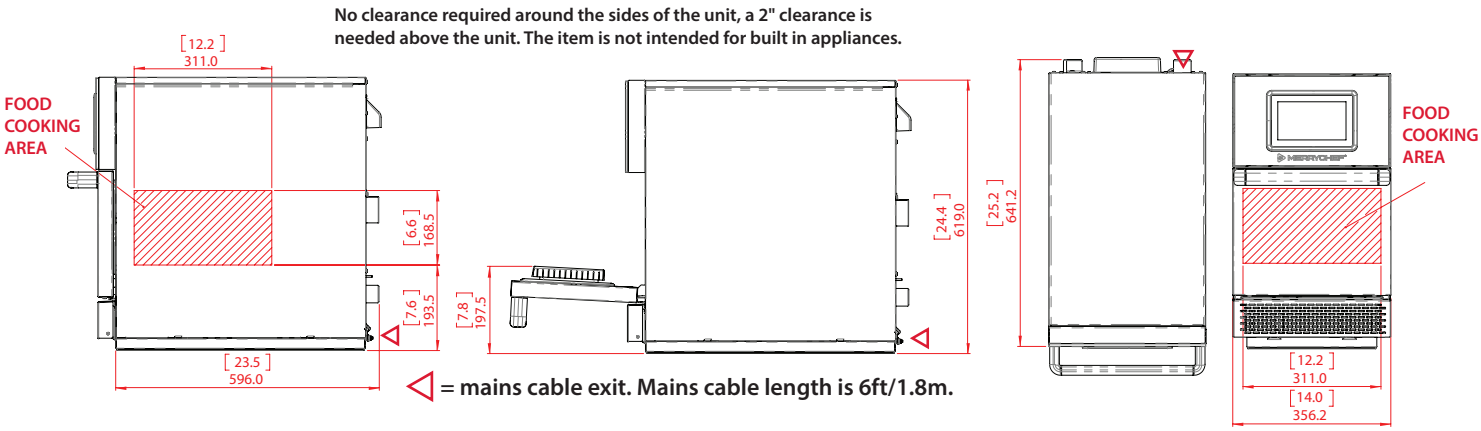

DIMENSIONS/WEIGHTS: BOXED OVEN

MODEL	OVERALL SIZE			WEIGHT	
	HEIGHT	WIDTH	DEPTH	STANDARD POWER	HIGH POWER
conneX®12	33.7" (855 mm)	20.5" (520 mm)	32.3" (820 mm)	NET 133 lbs. (60 kg)	NET 151 lbs. (68.7 kg)

DIMENSIONS/WEIGHTS: OVEN

MODEL	OVERALL SIZE			WEIGHT	
	HEIGHT	WIDTH	DEPTH	STANDARD POWER	HIGH POWER
conneX®12	24.4" (619 mm)	14.0" (356.2 mm)	25.2" (641.2 mm)	NET 111 lbs. (50 kg)	NET 130 lbs. (58.7 kg)

POWER REQUIREMENTS & OUTPUT

*This is not consumption. **This is approx. microwave power output.
Merrychef recommend installing a Type D circuit breaker whilst remaining in accordance with local regulations.

Model	Model number	Finish	ELECTRICAL SUPPLY							POWER OUTPUT (APPROX.)		
			Voltage	Frequency	Arrangement and connections	Plug Type	Plug image	Plug phase current rating*	Max. power input	Microwave** (IEC 705) 100%	Convected heat	Combination mode
conneX®12 standard power	X12GXMV5AAL1CLUK	Stainless steel	220-230V	50Hz	Single Phase L1+N+E	UK BS1363		13A	2990 W	1000 W	2200 W	1000 W** + 900 W
	X12FXMV5ABL1CLEU		220-230V	50Hz	Single Phase L1+N+E	EU CEE7		16A	3680 W	1000 W	2200 W	1000 W** + 1300 W
	X12GXMV5AAL1BKUK	Carbon black	220-230V	50Hz	Single Phase L1+N+E	UK BS1363		13A	2990 W	1000 W	2200 W	1000 W** + 900 W
	X12FXMV5ABL1BKEU		220-230V	50Hz	Single Phase L1+N+E	EU CEE7		16A	3680 W	1000 W	2200 W	1000 W** + 1300 W
conneX®12 high power	X12DBMV5HEL1CLEU	Stainless steel	220-230V	50Hz	Single Phase L1+N+E	IEC 309 3 Pin		32A	6000 W	2000 W	2200 W	2000 W** + 2200 W
	X12DBMV5BDL1CLEU		380-400V	50Hz	Twin Phase L1+L2+N+E	IEC 309 5 Pin		16A	1700 W + 2000 W	2000 W	2200 W	2000 W** + 2200 W
	X12DBMV5GCL1CLEU		380-400V	50Hz	Twin Phase L1+L2+N+E	IEC 309 5 Pin		32A	3100 W + 3800 W	2000 W	2200 W	2000 W** + 2200 W
	X12DBMV5HEL1BKEU	Carbon black	220-230V	50Hz	Single Phase L1+N+E	IEC 309 3 Pin		32A	6000 W	2000 W	2200 W	2000 W** + 2200 W
	X12DBMV5BDL1BKEU		380-400V	50Hz	Twin Phase L1+L2+N+E	IEC 309 5 Pin		16A	1700 W + 2000 W	2000 W	2200 W	2000 W** + 2200 W
	X12DBMV5GCL1BKEU		380-400V	50Hz	Twin Phase L1+L2+N+E	IEC 309 5 Pin		32A	3100 W + 3800 W	2000 W	2200 W	2000 W** + 2200 W

Welbilt reserves the right to make changes to the design or specifications without prior notice.

Welbilt UK Limited,
Ashbourne House, The Guildway
Old Portsmouth Road,
Guildford, GU3 1LR,
United Kingdom

Email: Merrychef.marketing@welbilt.com

Tel: 00 44 1483 464 900

www.merrychef.com

© 2026 Merrychef U.K.