ALTO-SHAAM

Parts Manual

Cook & Hold Ovens
Smoker Ovens

Simple Control

300-TH
500-TH
750-TH
1000-TH
1200-TH
1750-TH

750-SK
1000-SK
1200-SK
1750-SK

MN-46711
REV 2
12/2020

Manufacturer's Information

Copyright

© Copyright 12/2020 by Alto-Shaam, Inc.
All rights reserved.
This manual or any portion thereof may not be reproduced or used in any manner whatsoever without the express written permission of Alto-Shaam, Inc

Trademarks

All trademarks referenced in this documentation are the property of their respective owners.

Manufacturer

Alto-Shaam, Inc.
P.O. Box 450
W164 N9221 Water Street
Menomonee Falls, WI 53052

Models Covered

300-TH 500-TH 750-TH 1000-TH 1200-TH 1750-TH 750-SK 1000-SK 1200-SK 1750-SK	US (UL Certified) Models International (CE Certified) Models

Serial Number

The unit serial number is required for ordering the correct service parts. Record the unit serial number in the space provided below.

Serial Number

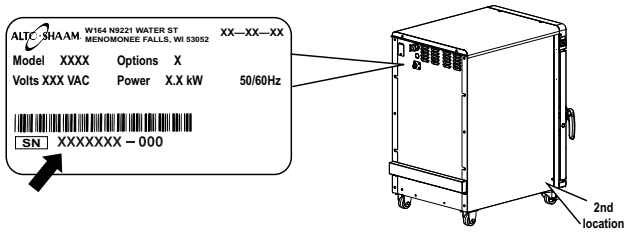

Parts Ordering Information

Original manufacturer's replacement parts may be ordered directly from the Alto-Shaam network of Authorized Service Agents and Parts Distributors. Follow this link for a map to a local partner: **https://www.alto-shaam.com/en/how-to-buy**. If you are an Authorized Service Agent or Parts Distributor, please submit your purchase order to **parts@alto-shaam.com**.

Non-OEM parts may be substituted; however, these parts must be of equal quality and specifications as those provided by Alto-Shaam.

Table of Contents

Manufacturer's Information 2
Table of Contents 3
Exterior Panels Package, 300 Series 4
Exterior Panels Package 500 Series 5
Exterior Panels Package 750 Series 6
Exterior Panels Package 1000 Series 7
Exterior Panels Package 1200 Series 8
Exterior Panels Package 1750 Series 9
Base Unit Package "A", 300 Series 10
Base Unit Package "B", 300 Series 11
Base Unit Package "A", 500 Series 12
Base Unit Package "A", 750 Series 13
Base Unit Package "B", 750 Series 14
Base Unit Package "A", 1000 Series 15
Base Unit Package "B", 1000 Series 16
Base Unit Package "A", 1200 Series 17
Base Unit Package "B", 1200 Series 18
Base Unit Package "A", 1750 Series 19
Base Unit Package "B", 1750 Series 20
Control Package, Simple, 300 Series 21
Control Package, Simple, 500 Series 22
Control Package, Simple, 750 Series 23
Control Package, Simple, 1000 Series 24
Control Package, Simple, 1200 Series 25
Control Package, Simple, 1750 Series 26
Door Assembly, Solid, 300 Series 27
Door Assembly, Solid, RH, Simple 500 Series 28
Door Assembly, Solid, LH, Simple 500 Series 29
Door Assembly, Window, RH, Simple 500 Series 30
Door Assembly, Window, LH, Simple 500 Series 31
Door Assembly, Solid, RH, Simple 750/1750 Series 32
Door Assembly, Solid, LH, Simple 750/1750 Series 33
Door Assembly, Window, RH, Simple 750/1750 Series 34
Door Assembly, Window, LH, Simple 750/1750 Series 35
Door Assembly, Solid, RH, Simple 1000/1200 Series 36
Door Assembly, Solid, LH, Simple 1000/1200 Series 37
Door Assembly, Window, RH, Simple 1000/1200 Series 38
Door Assembly, Window, LH, Simple 1000/1200 Series 39
Electrical Chassis, 120V, 300 Series 40
Electrical Chassis, 120V, 500 Series 41
Electrical Chassis, 120V, 750/1000 Series 42
Electrical Chassis,208-240V, 230V, 300 Series 43
Electrical Chassis,208-240V, 230V, 500 Series 44
Electrical Chassis, 208-240V, 230V, 750/1000 Series 45
Electrical Chassis, 208-240V, 230V, 1250/1750 Series 46
Electrical Cords, Cord Sets, and Bushings 47
Cables and Cable Wraps 48
Probe Packages 49
Smoker Elements 50
Extended Drip Trays 51
Bumpers 52
Caster and Leg Assemblies 53

Exterior Panels Package, 300 Series

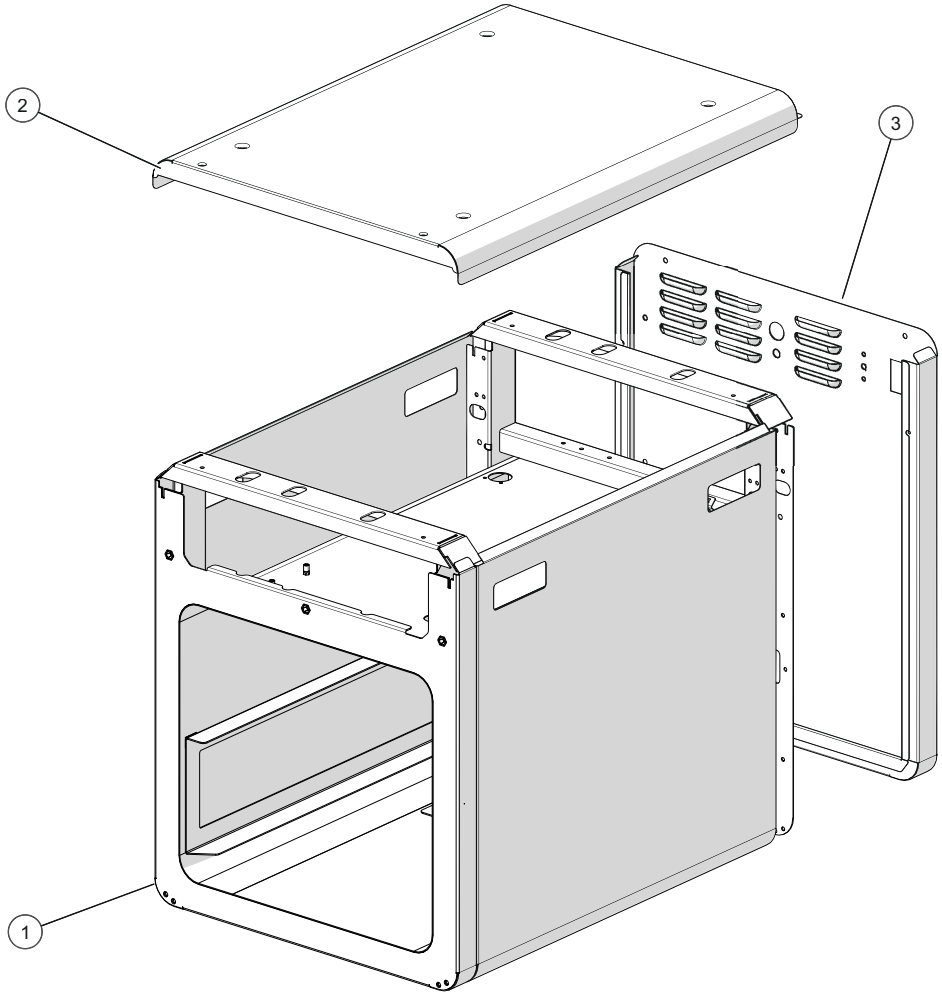

ID	Part No.	Description
1	5030217	PANEL,OUTER CASING,W/ INSERTS
2	1025979	COVER, TOP
3	1025980	PANEL,BACK,OUTER

Exterior Panels Package 500 Series

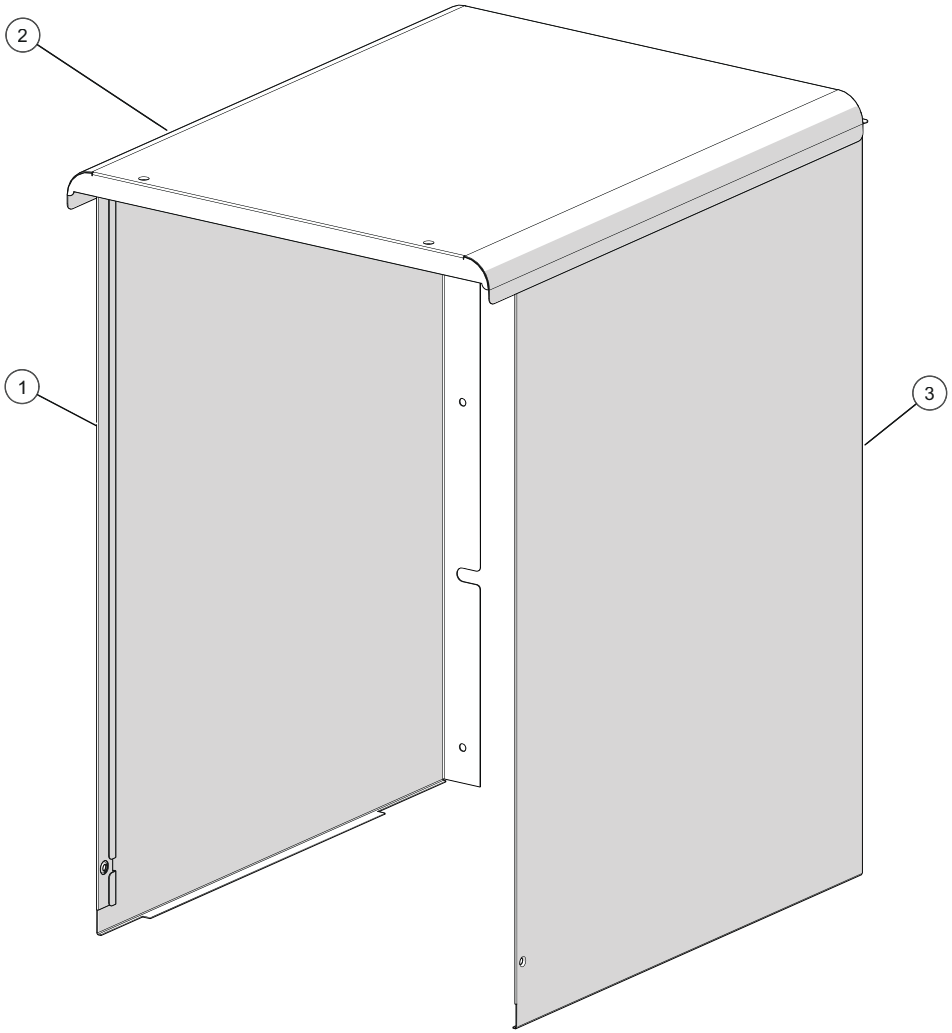

ID	Part No.	Description
1	1025915	PANEL,SIDE,LEFT
2	1025907	COVER,TOP
3	1025914	PANEL,SIDE,RIGHT

Exterior Panels Package 750 Series

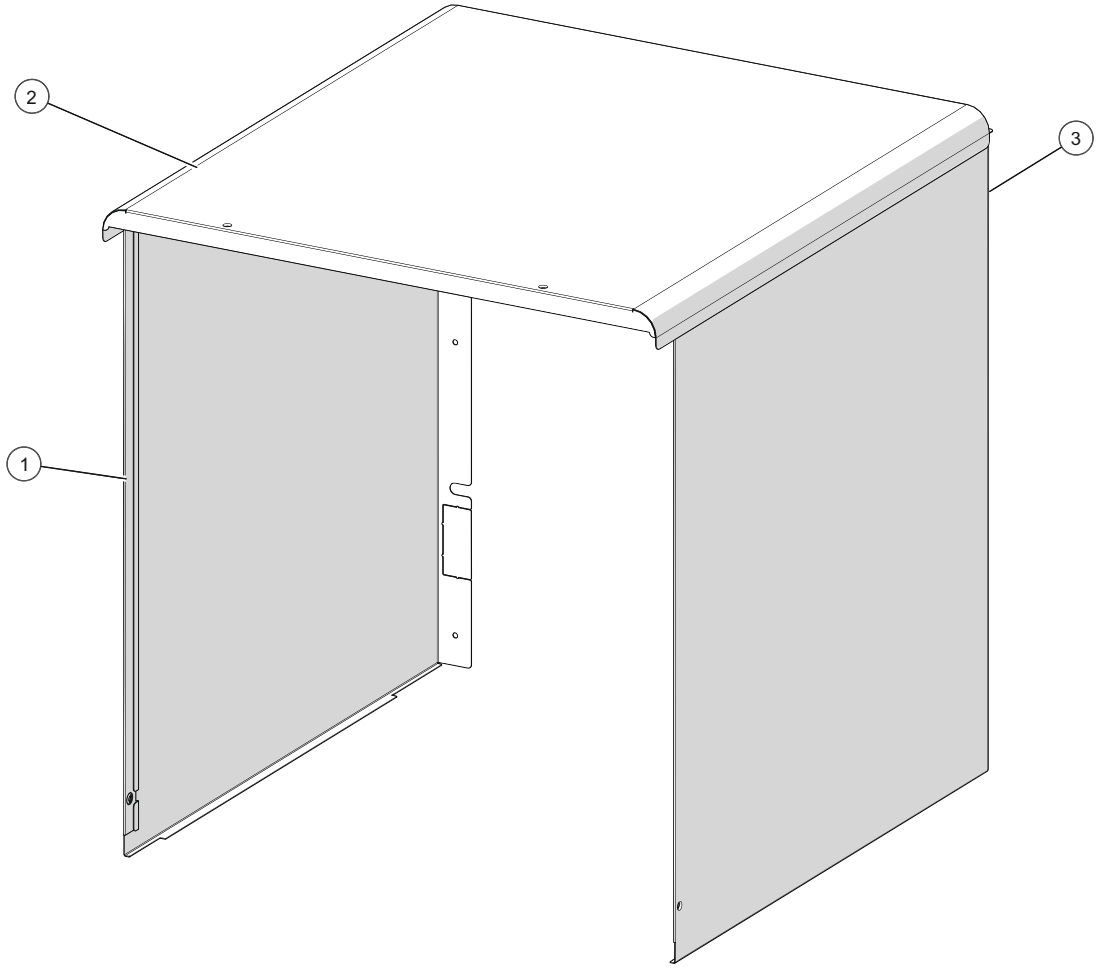

ID	Part No.	Description
1	1025935	PANEL,SIDE,LEFT
2	1025927	COVER,TOP
3	1025934	PANEL,SIDE,RIGHT

Exterior Panels Package 1000 Series

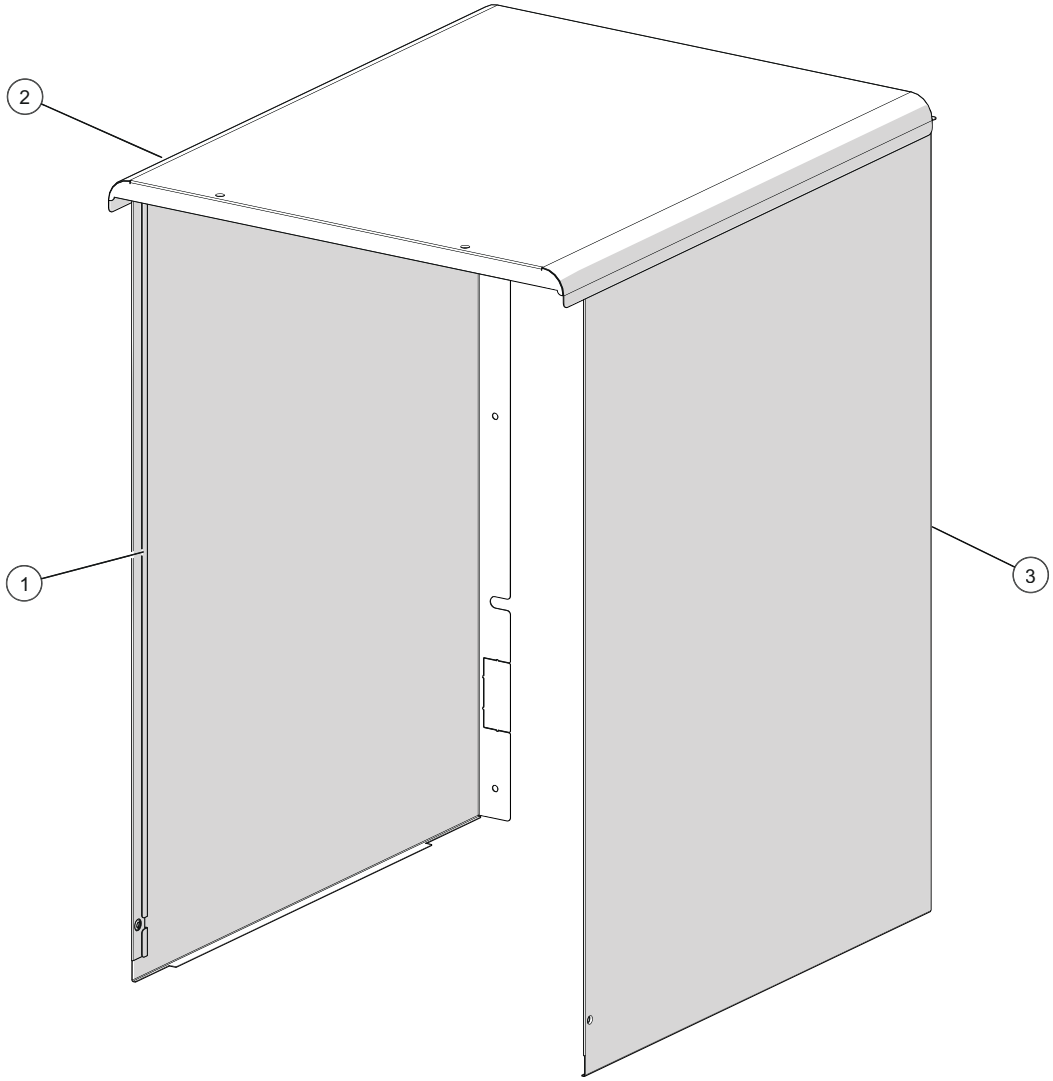

ID	Part No.	Description
1	1025892	PANEL,SIDE,LEFT
2	1025881	COVER,TOP
3	1025891	PANEL,SIDE,RIGHT

Exterior Panels Package 1200 Series

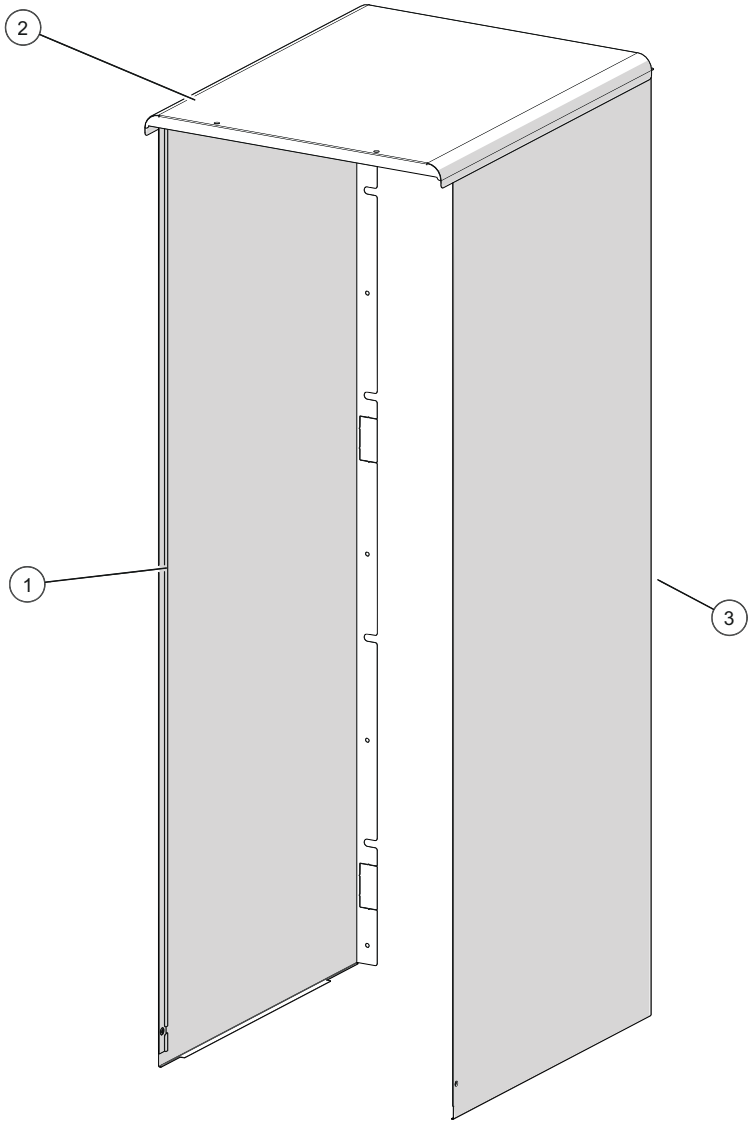

ID	Part No.	Description
1	1025894	PANEL,SIDE,LEFT
2	1025881	COVER,TOP
3	1025893	PANEL,SIDE,RIGHT

Exterior Panels Package 1750 Series

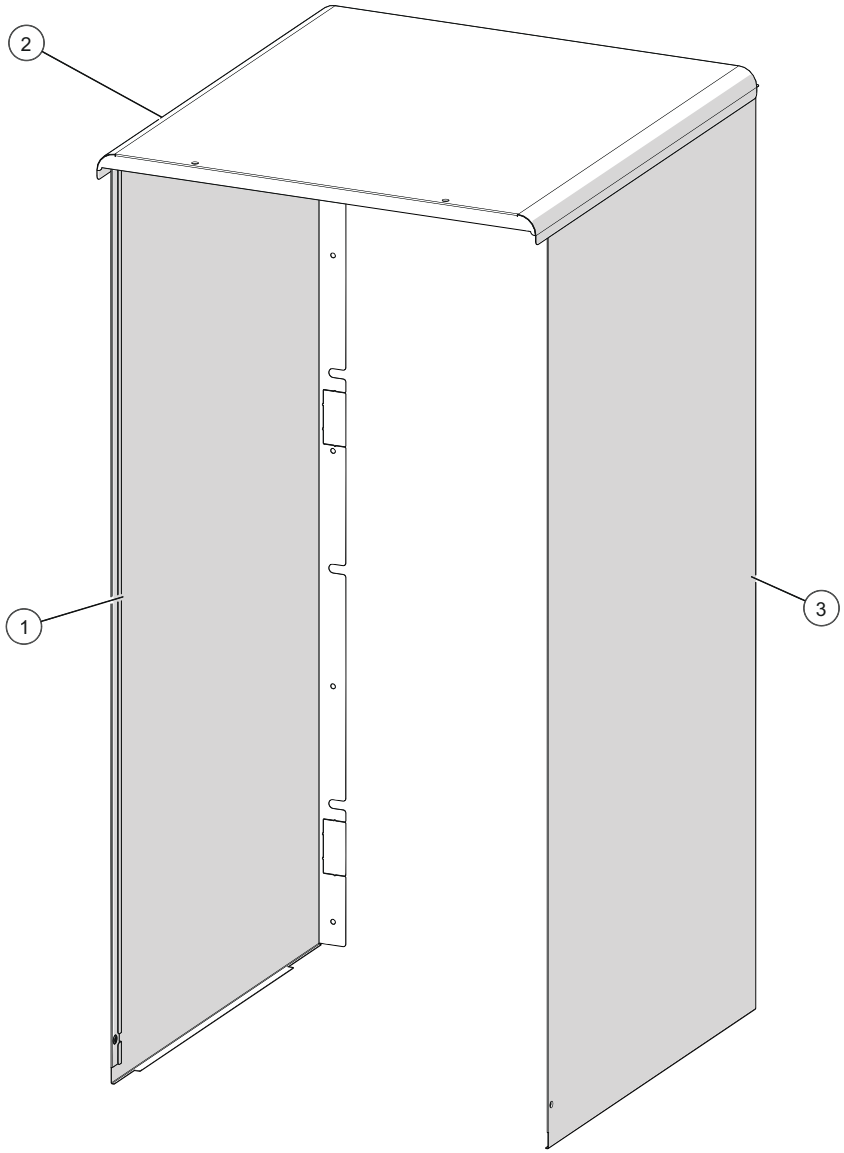

ID	Part No.	Description
1	1025973	PANEL,SIDE,LEFT
2	1025927	COVER,TOP
3	1025972	PANEL,SIDE,RIGHT

Base Unit Package “A”, 300 Series

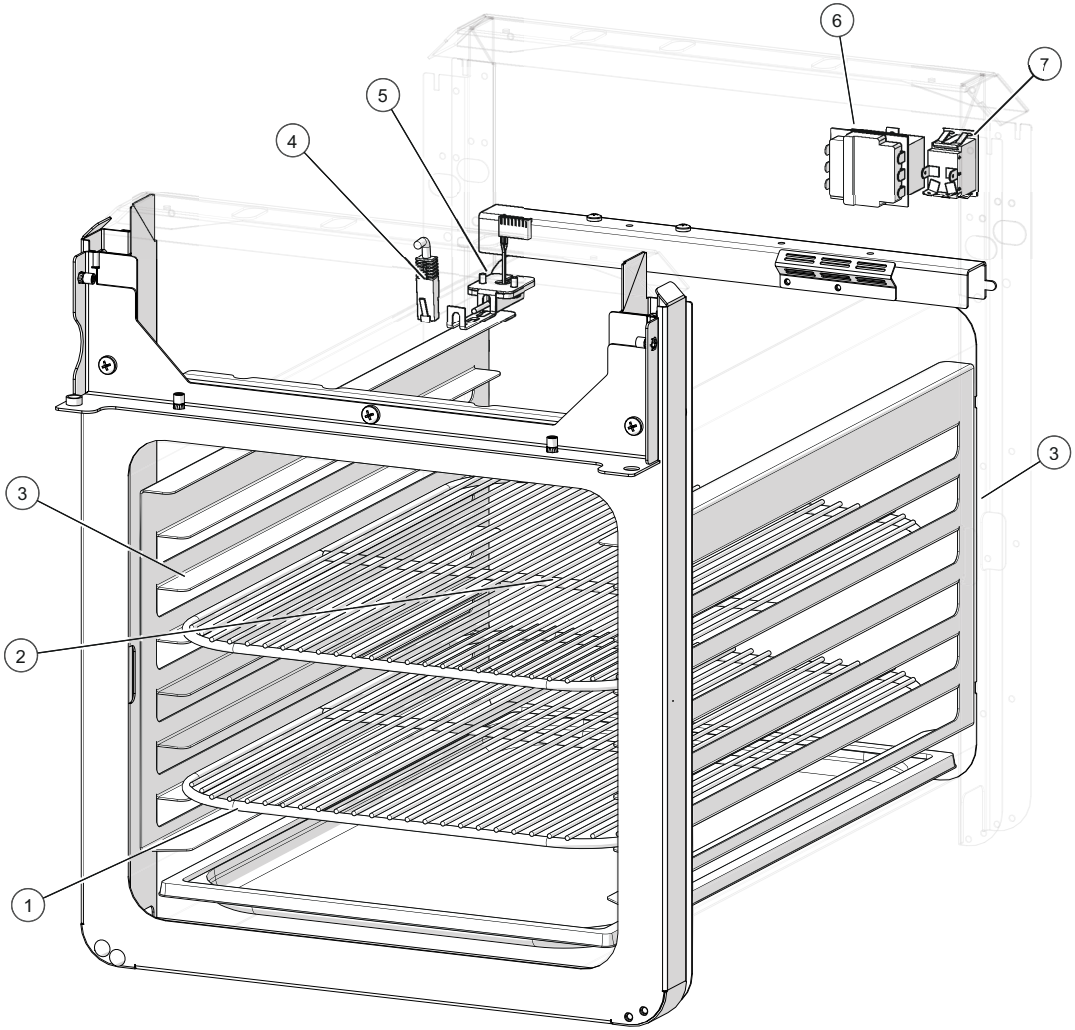

ID	Part No.	Description
1	PN-37119	PAN, FULL SIZE, 3/4" HEIGHT, S/S
2	SH-2107	500 SHELF S/S
3	1012872	300-TH SIDE RACK
4	CB-35778	CAN/ETHERNET CABLE,1.5',SRJ45
5	5029655	SENSOR, 100 OHM, 110" WIRE
6	TT-33476	THERMOSTAT, 300F HI-LIMIT
7	SW-34769	SWITCH,ROCKER,125-277V,20A

Base Unit Package "B", 300 Series

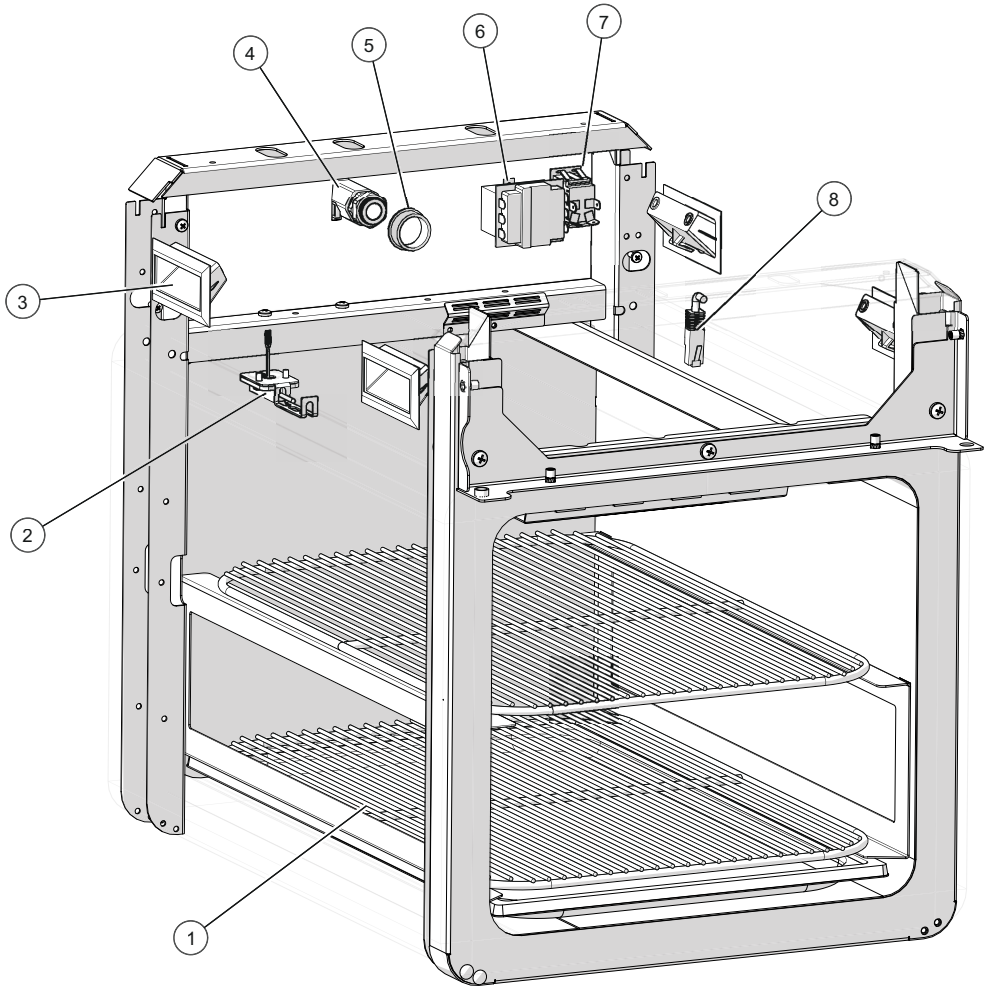

ID	Part No.	Description
1	SH-2107	500 SHELF S/S
2	5030090	SENSOR BLOCK ASSEMBLY
3	HD-28789	HANDLE, PULL RECESSED, BLACK
4	BU-34898	BUSHING, STRAIN RELIEF, 90°, BLK
5	BU-3378	1 1/8" SNAP BUSHING
6	TT-33476	THERMOSTAT, 300F HI-LIMIT
7	SW-34769	SWITCH,ROCKER,125-277V,20A
8	CB-35778	CAN/ETHERNET CABLE,1.5',SRJ45

Base Unit Package "A", 500 Series

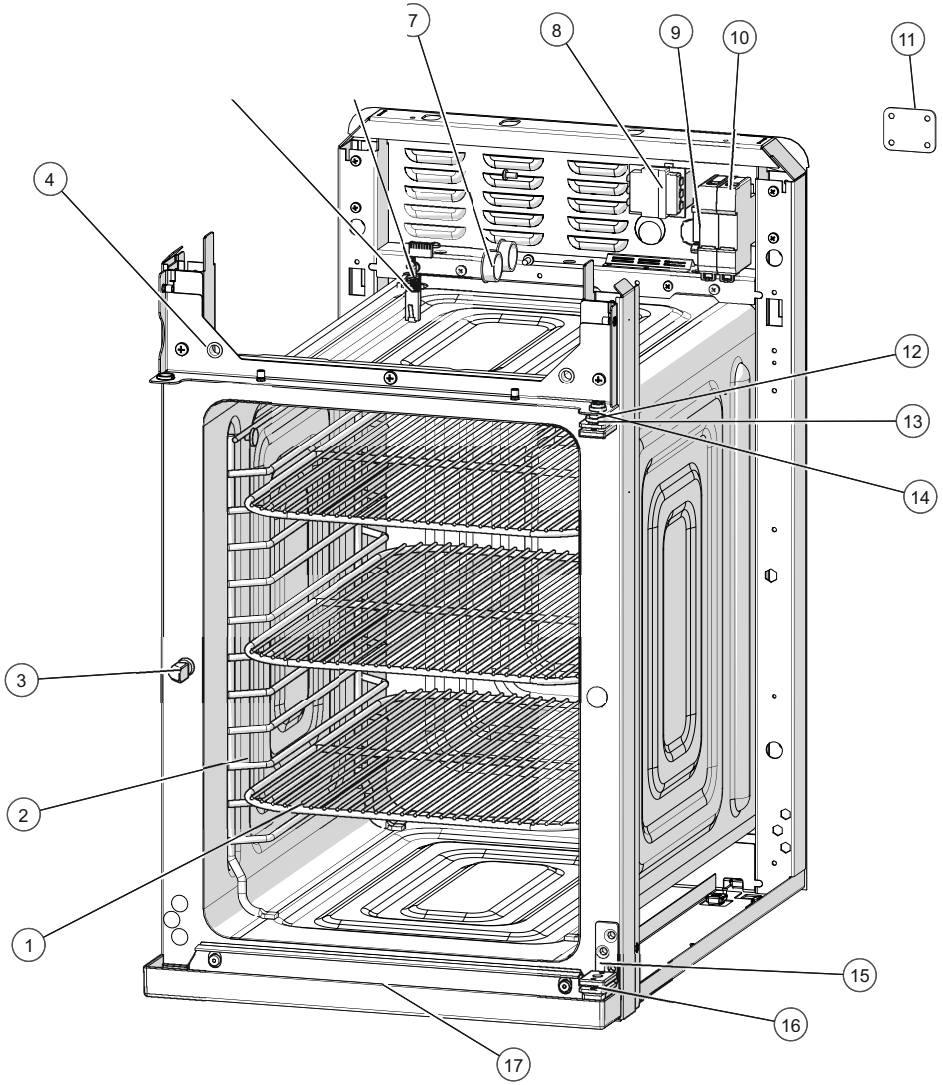

ID	Part No.	Description
1	SH-47163	SHELF, S/S
2	SR-39693	RACK,SIDE
3	LT-38342	LATCH, DOOR, DOG, LONG NOSE
4	BU-3006	1/2" HOLE BUSHING
5	CB-35778	CAN/ETHERNET CABLE,1.5',SRJ45
6	5029655	SENSOR,100 OHM,110" WIRE
7	BU-3378	1 1/8" SNAP BUSHING
8	TT-33476	THERMOSTAT, 300F HI-LIMIT
9	TM-39606	TERMINAL, SCREWLESS END
10	SW-46275	SWITCH, BREAKER, 40A, DIN RAIL
11	BT-26884	BRACKET, TETHER.
12	HG-39655	HINGE,PIN,DOOR,ADJUSTABLE
13	HG-39656	HINGE,PLATE,DOOR PIN
14	BU-39572	BUSHING,HINGE,DOOR
15	HG-39652	HINGE,DOOR,BOTTOM
16	HG-47157	HINGE PIN,BOTTOM,DOOR
17	5032098	DRIP TRAY ASSY,BOTTOM

Base Unit Package "A", 750 Series

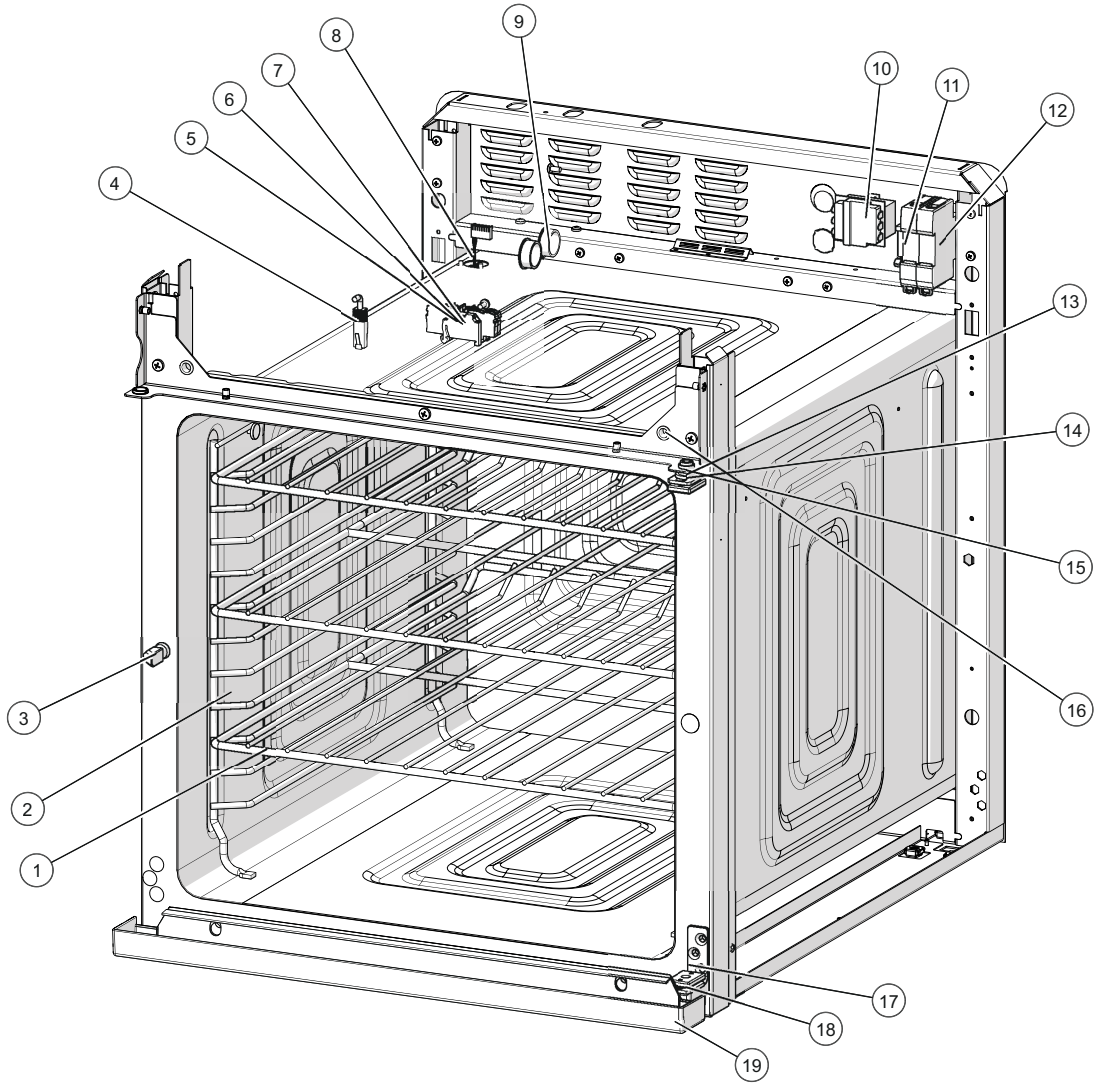

ID	Part No.	Description
1	SH-2324	SHELF, S/S, 750-TH
2	SR-39692	RACK,SIDE
3	LT-38342	LATCH, DOOR, DOG, LONG NOSE
4	CB-35778	CAN/ETHERNET CABLE,1.5',SRJ45
5	TM-39575	TERMINAL, 6mm, BLUE, SPRING
6	TM-39576	TERMINAL, END SECTION, SPRING
7	TM-39574	TERMINAL, 6mm, ORANGE, SPRING
8	5029655	SENSOR,100 OHM,110" WIRE
9	BU-3378	1 1/8" SNAP BUSHING
10	TT-33476	THERMOSTAT, 300F HI-LIMIT
11	TM-39606	TERMINAL, SCREWLESS END
12	SW-46275	SWITCH, BREAKER, 40A, DIN RAIL
13	HG-39655	HINGE,PIN,DOOR,ADJUSTABLE
14	HG-39656	HINGE,PLATE,DOOR PIN
15	BU-39572	BUSHING,HINGE,DOOR
16	BU-3006	1/2" HOLE BUSHING
17	HG-39652	HINGE,DOOR,BOTTOM
18	HG-47157	HINGE PIN,BOTTOM,DOOR
19	5032099	DRIP TRAY ASSY,BOTTOM

Base Unit Package "B", 750 Series

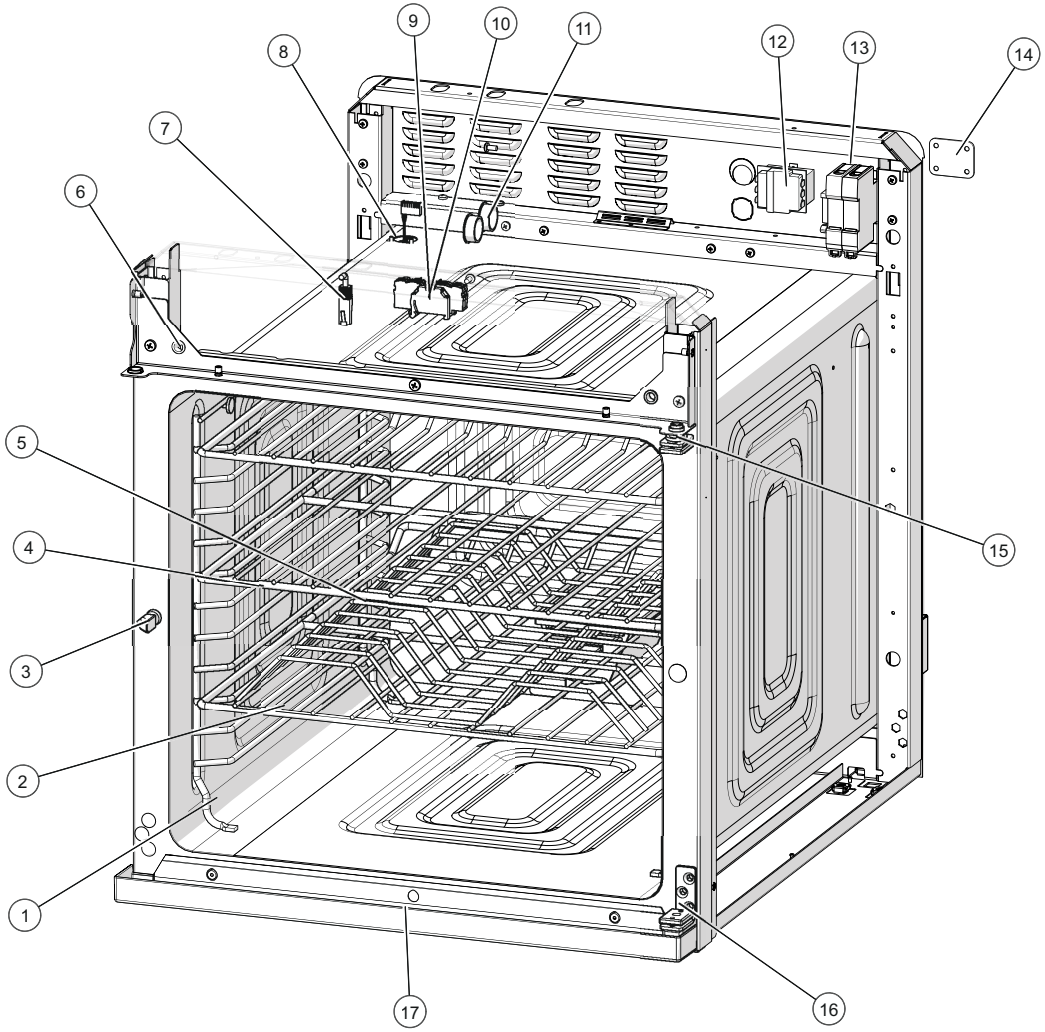

ID	Part No.	Description
1	SR-39692	RACK,SIDE
2	SH-2743	SHELF, RIB RACK, S/S
3	LT-38342	LATCH, DOOR, DOG, LONG NOSE
4	SH-2324	SHELF, S/S, 750-TH
5	BU-3611	5/8" SNAP BUSHING BLACK
6	BU-3006	1/2" HOLE BUSHING
7	CB-35778	CAN/ETHERNET CABLE,1.5',SRJ45
8	5029655	SENSOR, BLOCK
9	TM-39575	TERMINAL, 6mm, BLUE, SPRING
10	TM-39576	TERMINAL, END SECTION, SPRING
11	BU-3378	1 1/8" SNAP BUSHING
12	TT-33476	THERMOSTAT, 300F HI-LIMIT
13	TM-39606	TERMINAL, SCREWLESS END
14	BT-26884	BRACKET, TETHER.
15	HG-39655	HINGE,PIN,DOOR,ADJUSTABLE
16	HG-39652	HINGE,DOOR,BOTTOM
17	5032099	DRIP TRAY ASSEMBLY

Base Unit Package "A", 1000 Series

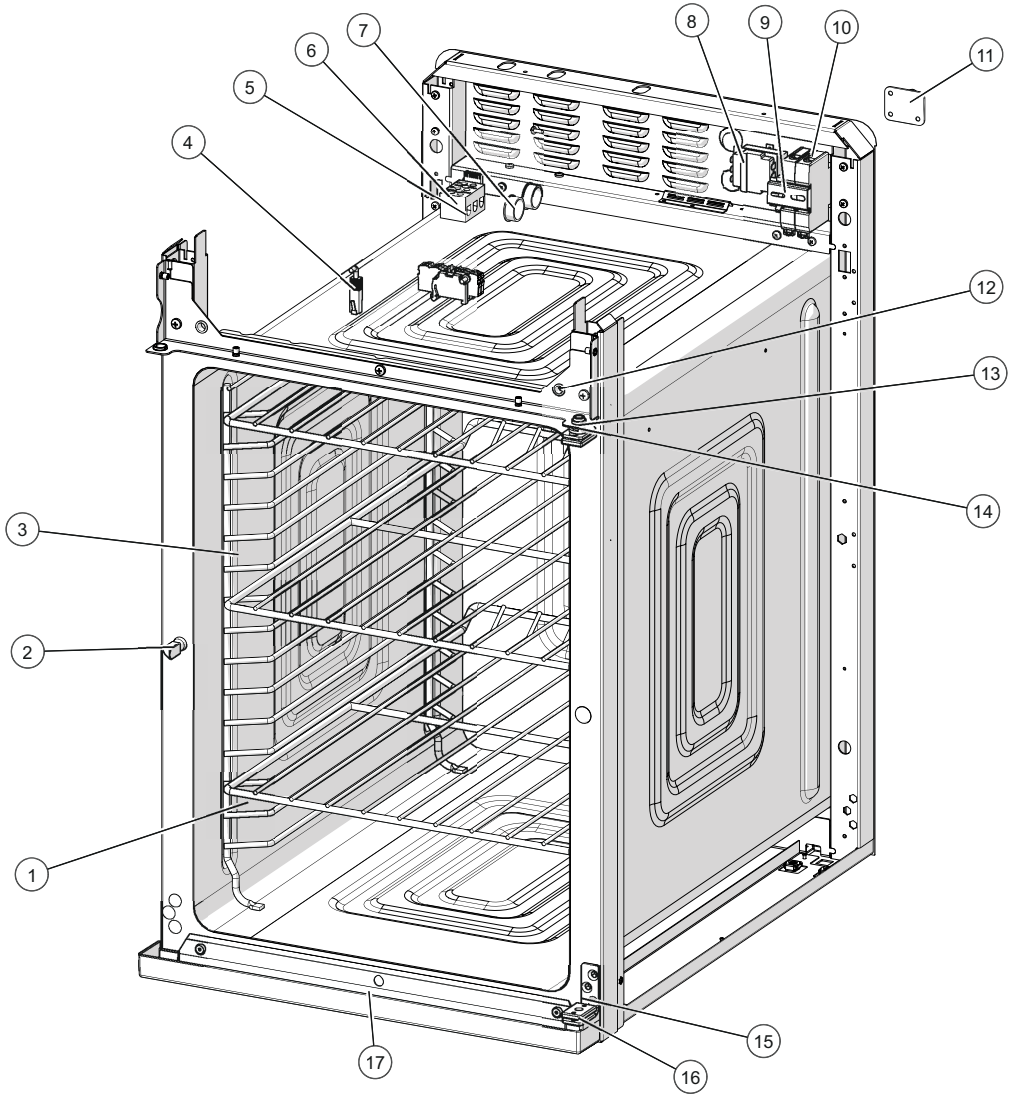

ID	Part No.	Description
1	SH-2325	SHELF, S/S, 1000-TH
2	LT-38342	LATCH, DOOR, DOG, LONG NOSE
3	SR-39570	RACK,SIDE
4	CB-35778	CAN/ETHERNET CABLE,1.5',SRJ45
5	BK-29605	BLOCK, SENSOR, ELEC. CONTROL
6	5029655	SENSOR, BLOCK
7	BU-3378	1 1/8" SNAP BUSHING
8	TT-33476	THERMOSTAT, 300F HI-LIMIT
9	TM-39606	TERMINAL, SCREWLESS END
10	SW-46275	SWITCH, BREAKER, 40A, DIN RAIL
11	BT-26884	BRACKET, TETHER.
12	BU-3006	1/2" HOLE BUSHING
13	BU-39572	BUSHING,HINGE,DOOR
14	HG-39655	HINGE,PIN,DOOR,ADJUSTABLE
15	HG-39652	HINGE,DOOR,BOTTOM
16	HG-47157	HINGE PIN,BOTTOM,DOOR
17	5032100	DRIP TRAY ASSEMBLY

Base Unit Package "B", 1000 Series

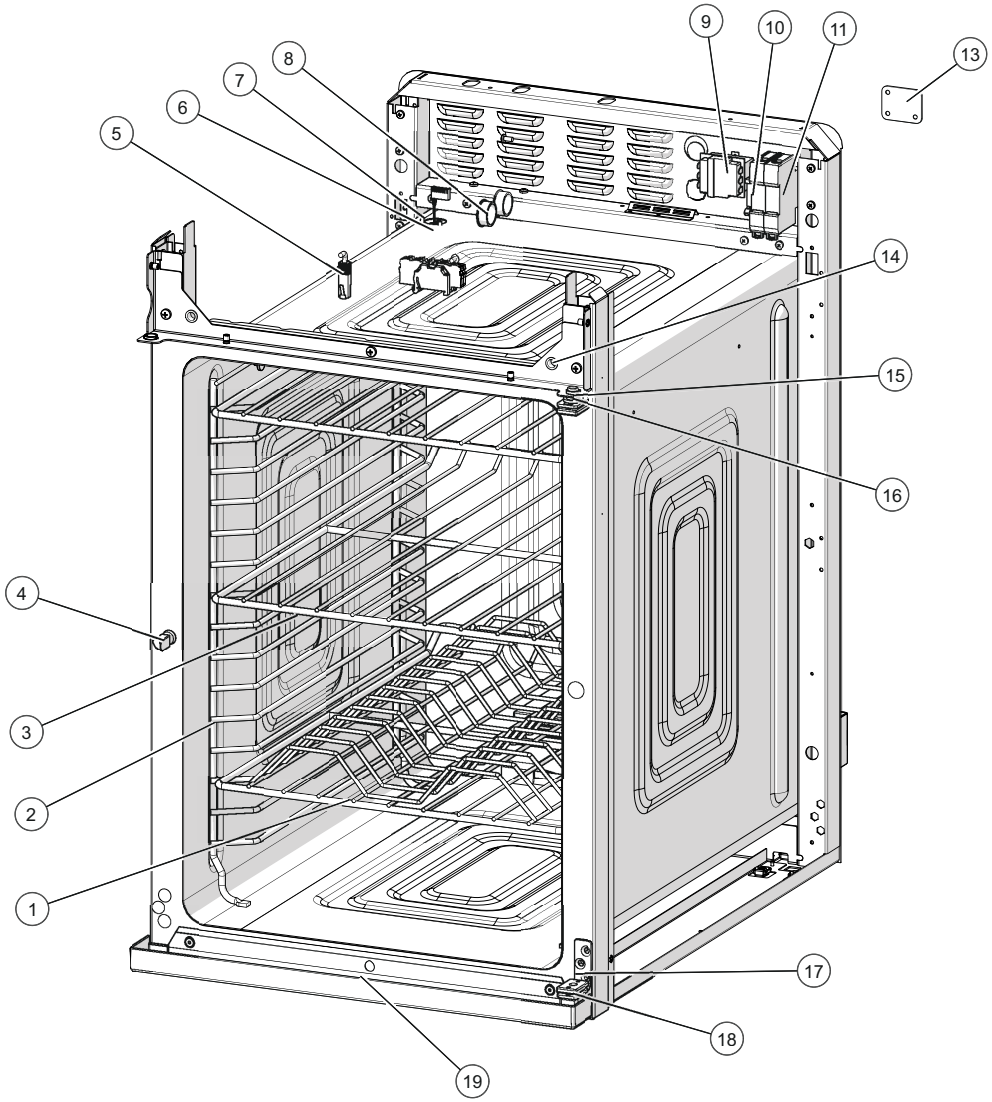

ID	Part No.	Description
1	SH-29474	SHELF, RIB RACK, S/S, 1000-SK
2	SR-39570	RACK,SIDE
3	SH-2325	SHELF, S/S, 1000-TH
4	LT-38342	LATCH, DOOR, DOG, LONG NOSE
5	CB-35778	CAN/ETHERNET CABLE,1.5',SRJ45
6	BK-29605	BLOCK, SENSOR, ELEC. CONTROL
7	5029655	SENSOR, 100 OHM, 110" WIRE
8	BU-3378	1 1/8" SNAP BUSHING
9	TT-33476	THERMOSTAT, 300F HI-LIMIT
10	TM-39606	TERMINAL, SCREWLESS END
11	SW-46275	SWITCH, BREAKER, 40A, DIN RAIL
13	BT-26884	BRACKET, TETHER.
14	BU-3006	1/2" HOLE BUSHING
15	BU-39572	BUSHING,HINGE,DOOR
16	HG-39655	HINGE,PIN,DOOR,ADJUSTABLE
17	HG-39652	HINGE,DOOR,BOTTOM
18	HG-47157	HINGE PIN,BOTTOM,DOOR
19	5032100	DRIP TRAY ASSEMBLY

Base Unit Package "A", 1200 Series

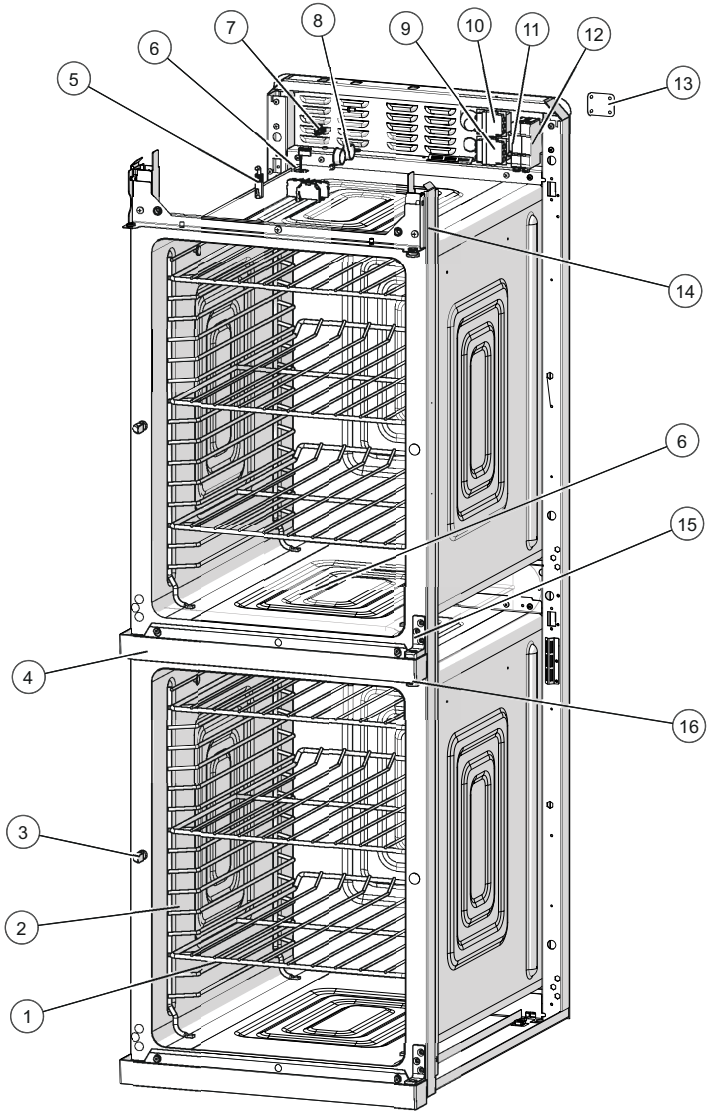

ID	Part No.	Description
1	SH-2325	SHELF, S/S, 1000-TH
2	SR-39570	RACK,SIDE
3	LT-38342	LATCH, DOOR, DOG, LONG NOSE
4	5032100	DRIP TRAY ASSEMBLY
5	CB-35778	CAN/ETHERNET CABLE,1.5',SRJ45
6	5029655	SENSOR, 100 OHM, 110"
7	TM-34881	TERMINAL, 3.5MM PLUGGABLE, 4 POLE
8	BU-3378	1 1/8" SNAP BUSHING
9	TT-34600	THERMOSTAT, 300F HI-LIMIT
10	TT-33476	THERMOSTAT, 300F HI-LIMIT
11	TM-39606	TERMINAL, SCREWLESS END
12	SW-46275	SWITCH, BREAKER, 40A, DIN RAIL
13	BT-26884	BRACKET, TETHER.
14	BU-3006	1/2" HOLE BUSHING
15	HG-39652	HINGE,DOOR,BOTTOM
16	BU-39572	BUSHING,HINGE,DOOR

Base Unit Package "B", 1200 Series

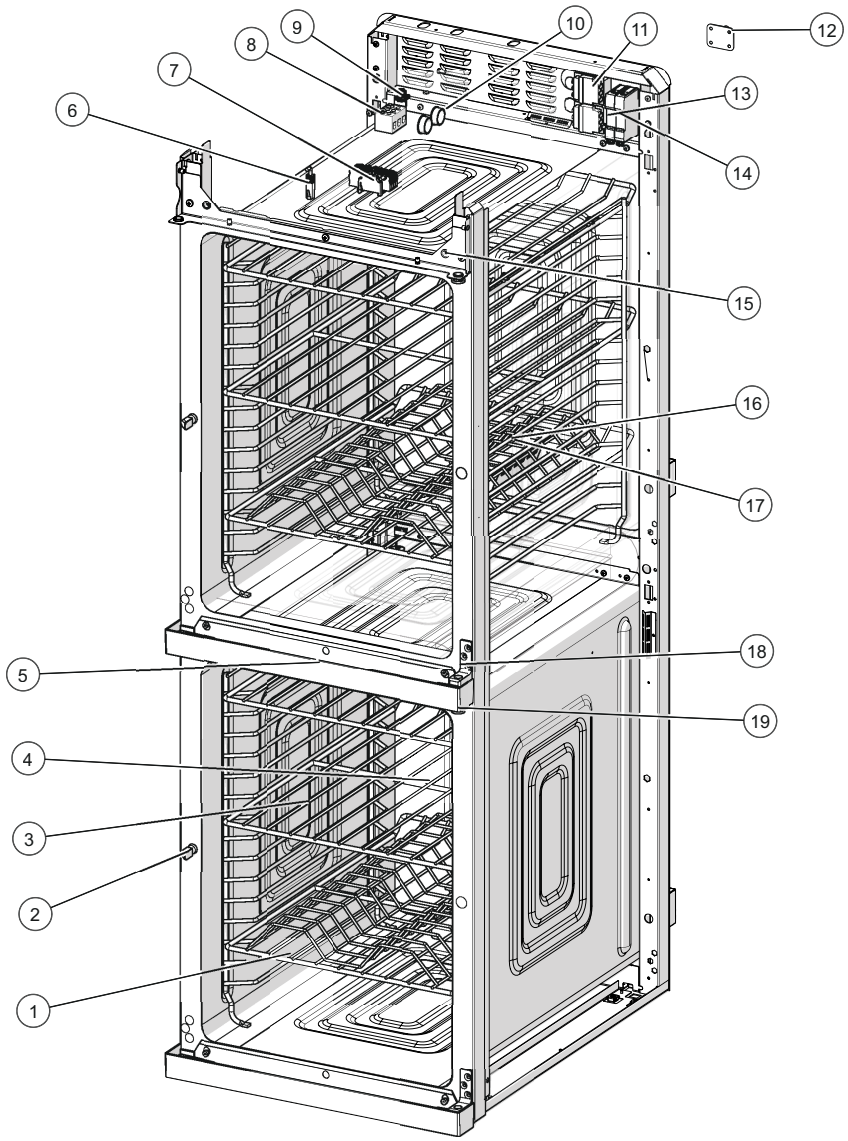

ID	Part No.	Description
1	SH-29474	SHELF, RIB RACK, S/S, 1000-SK
2	LT-38342	LATCH, DOOR, DOG, LONG NOSE
3	SR-39570	RACK,SIDE
4	SH-2325	SHELF, S/S, 1000-TH
5	5032100	DRIP TRAY ASSEMBLY
6	CB-35778	CAN/ETHERNET CABLE,1.5',SRJ45
7	5029826	TERMINAL BLOCK ASSY,DIN RAIL
8	5029655	SENSOR, 100 OHM, 110" WIRE
9	TM-34881	TERMINAL, 3.5MM PLUGGABLE, 4 POLE
10	BU-3378	1 1/8" SNAP BUSHING
11	TT-33476	THERMOSTAT, 300F HI-LIMIT
12	BT-26884	BRACKET, TETHER.
13	TM-39606	TERMINAL, SCREWLESS END
14	SW-46275	SWITCH, BREAKER, 40A, DIN RAIL
15	BU-3006	1/2" HOLE BUSHING
16	HG-2041	HINGE, S/S, LIFT OFF, (WITH PIN)
17	HG-2429	HINGE, S/S LIFT OFF, W/O PIN
18	HG-39652	HINGE,DOOR,BOTTOM
19	BU-39572	BUSHING,HINGE,DOOR

Base Unit Package “A”, 1750 Series

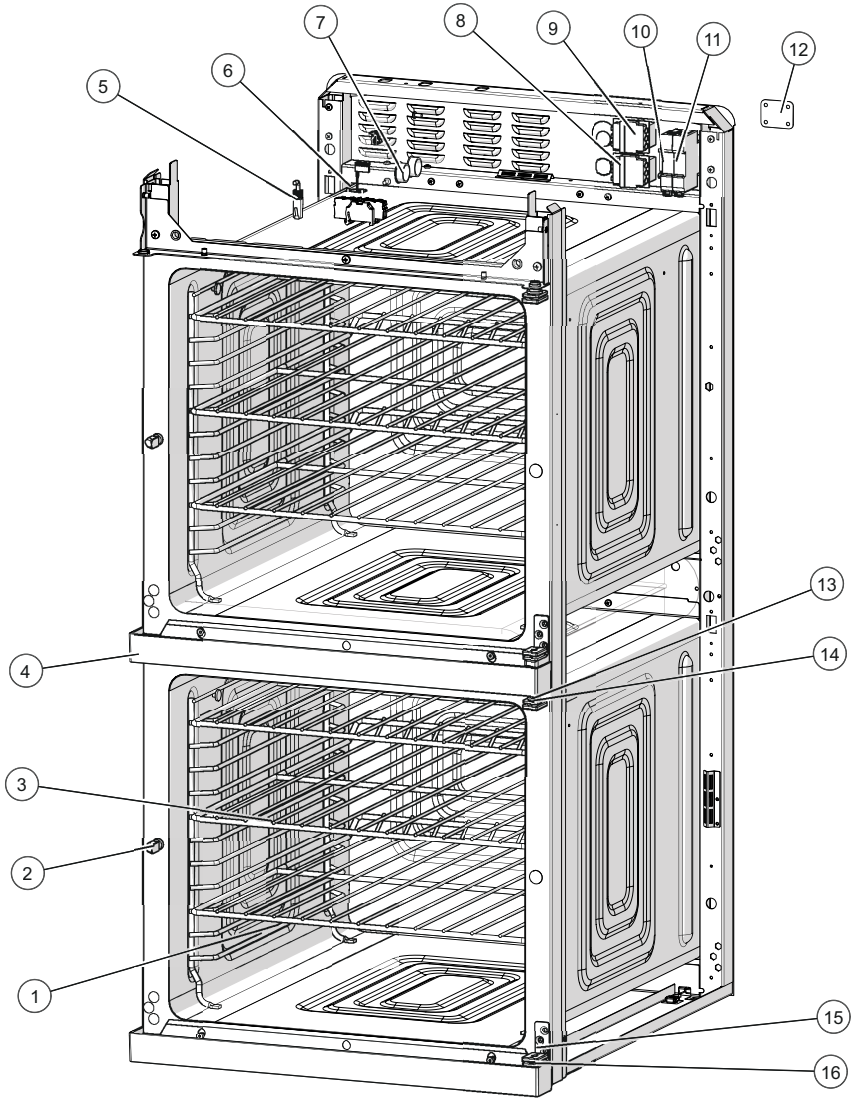

ID	Part No.	Description
1	SH-2324	SHELF, S/S, 750-TH
2	LT-38342	LATCH, DOOR, DOG, LONG NOSE
3	SR-39692	RACK,SIDE
4	5032099	DRIP TRAY ASSEMBLY
5	CB-35778	CAN/ETHERNET CABLE,1.5',SRJ45
6	5029655	SENSOR, 100 OHM, 110" WIRE
7	BU-3378	1 1/8" SNAP BUSHING
8	TT-34600	THERMOSTAT, 300F HI-LIMIT
9	TT-33476	THERMOSTAT, 300F HI-LIMIT
10	TM-39606	TERMINAL, SCREWLESS END
11	SW-46275	SWITCH, BREAKER, 40A, DIN RAIL
12	BT-26884	BRACKET, TETHER.
13	HG-39655	HINGE,PIN,DOOR,ADJUSTABLE
14	HG-39656	HINGE,PLATE,DOOR PIN
15	HG-39652	HINGE,DOOR,BOTTOM
16	HG-47157	HINGE PIN,BOTTOM,DOOR

Base Unit Package "B", 1750 Series

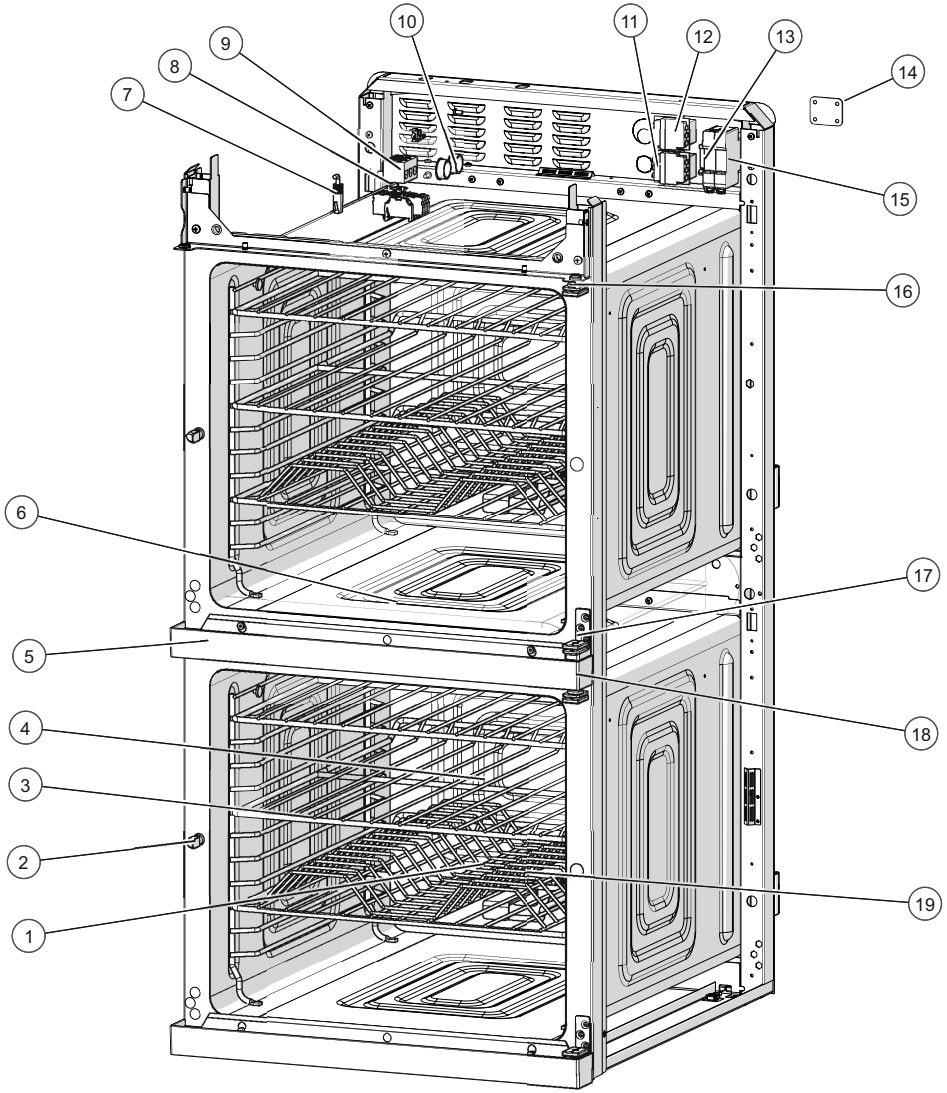

ID	Part No.	Description
1	SH-2743	SHELF, RIB RACK, S/S, 767-SK
2	LT-38342	LATCH, DOOR, DOG, LONG NOSE
3	SR-39692	RACK,SIDE
4	SH-2324	SHELF, S/S, 750-TH
5	5032099	DRIP TRAY ASSEMBLY
6	BK-29605	BLOCK, SENSOR, ELEC. CONTROL
7	CB-35778	CAN/ETHERNET CABLE,1.5',SRJ45
8	5029655	SENSOR, 100 OHM, 110" WIRE
9	BK-3019	T-BLOCK
10	BU-3378	1 1/8" SNAP BUSHING
11	TT-34600	THERMOSTAT, 300F HI-LIMIT
12	TT-33476	THERMOSTAT, 300F HI-LIMIT
13	TM-39606	TERMINAL, SCREWLESS END
14	BT-26884	BRACKET, TETHER.
15	SW-46275	SWITCH, BREAKER, 40A, DIN RAIL
16	HG-39655	HINGE,PIN,DOOR,ADJUSTABLE
17	HG-39652	HINGE,DOOR,BOTTOM
18	BU-3006	1/2" HOLE BUSHING
19	BK-33546	BLOCK, 2 TERMINAL, PORCELAIN

Control Package, Simple, 300 Series

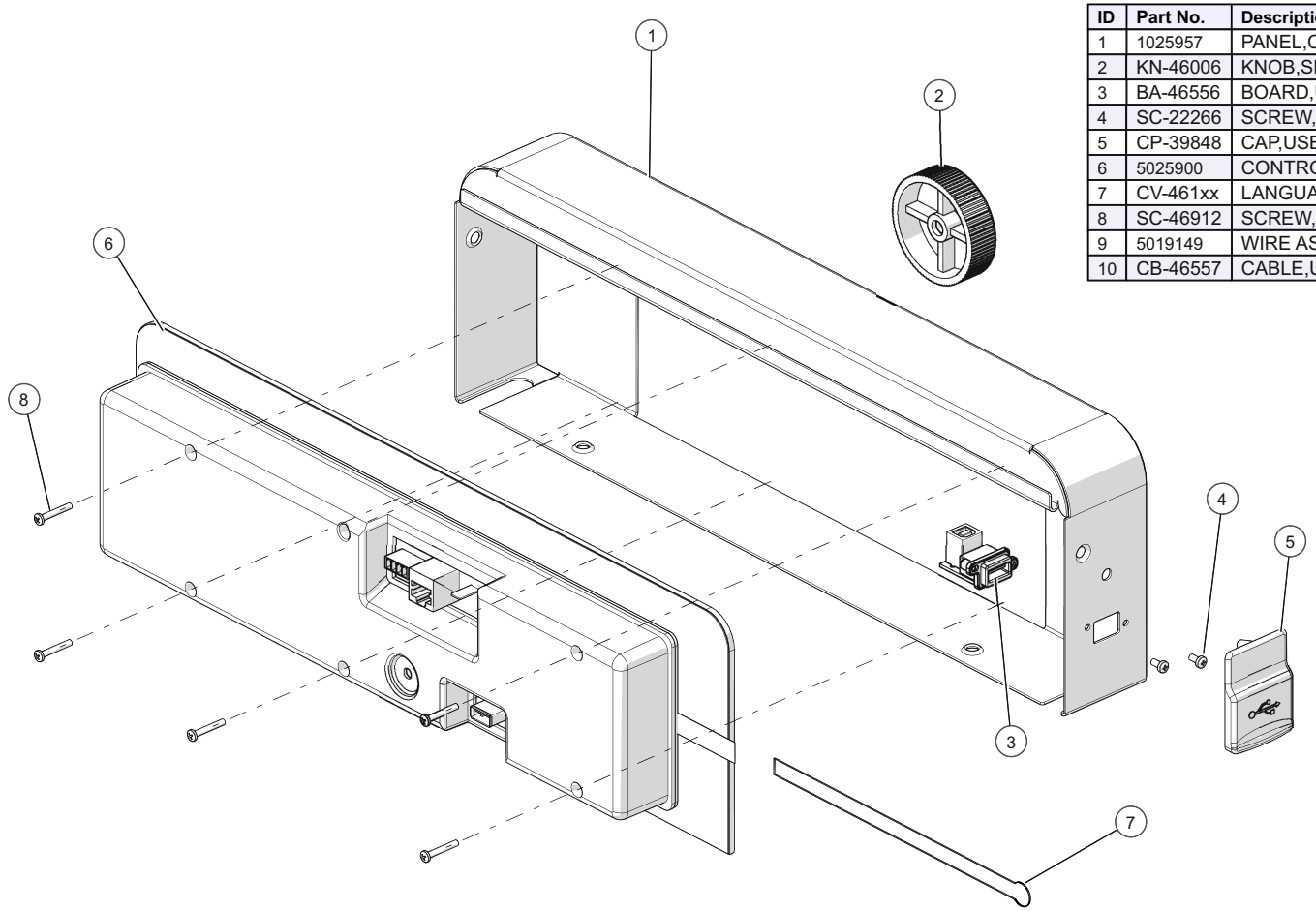

ID	Part No.	Description
1	1025957	PANEL,CONTROL POD
2	KN-46006	KNOB,SIMPLE CONTROL
3	BA-46556	BOARD,USB RECEPTACLE,90°
4	SC-22266	SCREW,M3x0.5X6MM PAN
5	CP-39848	CAP,USB
6	5025900	CONTROL GLASS ASSY,SIMPLE
7	CV-461xx	LANGUAGE INSERT (see chart)
8	SC-46912	SCREW,#4 X 3/4" PAN,THREAD CUT
9	5019149	WIRE ASSY, GROUND, SX (not shown)
10	CB-46557	CABLE,USB,COMMUNICATION,0.5M (not shown)

Control Package, Simple, 500 Series

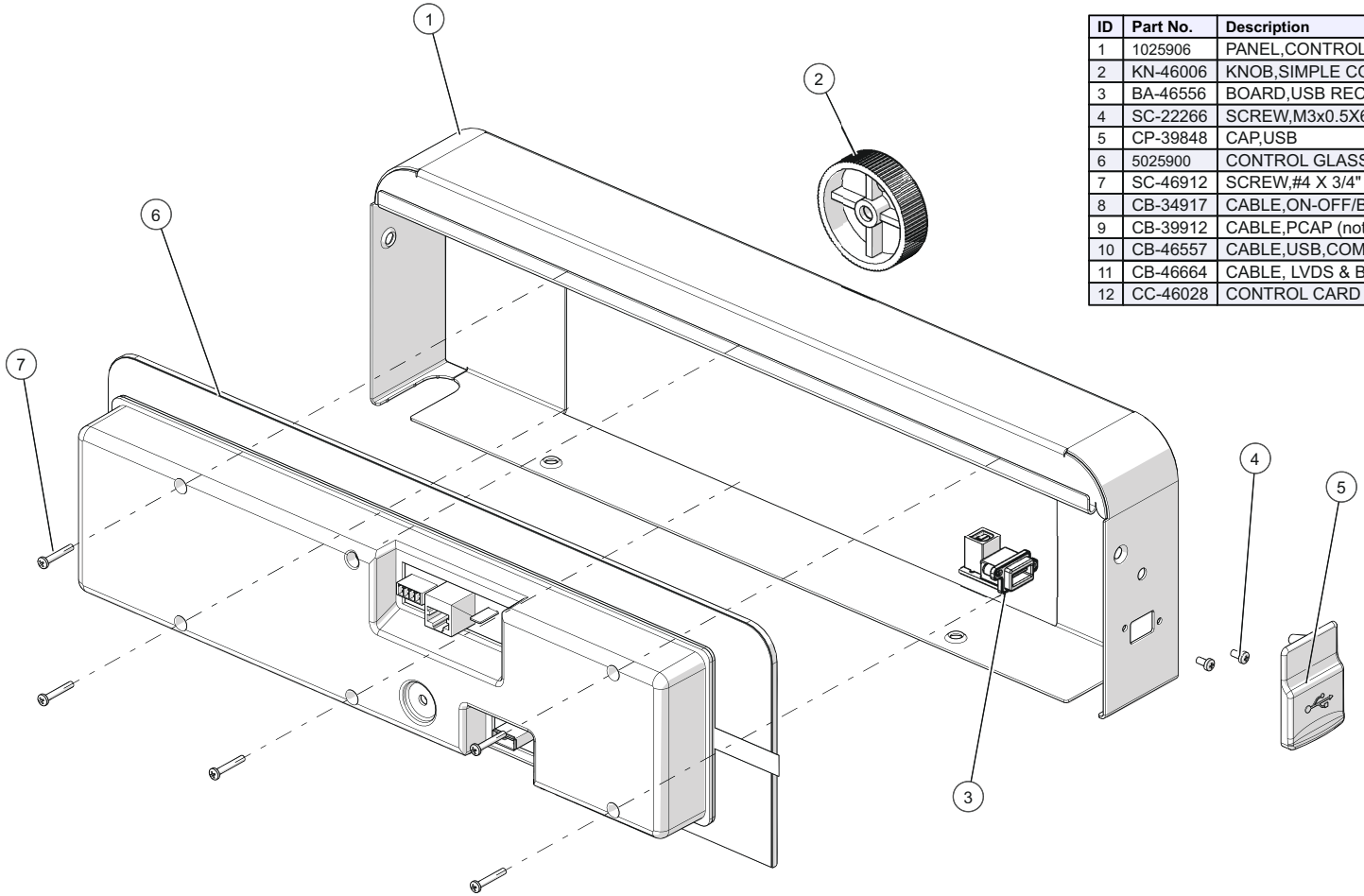

ID	Part No.	Description
1	1025906	PANEL,CONTROL POD
2	KN-46006	KNOB,SIMPLE CONTROL
3	BA-46556	BOARD,USB RECEPTACLE,90°
4	SC-22266	SCREW,M3x0.5X6MM PAN
5	CP-39848	CAP,USB
6	5025900	CONTROL GLASS ASSY,SIMPLE
7	SC-46912	SCREW,#4 X 3/4" PAN,THREAD CUT
8	CB-34917	CABLE,ON-OFF/BOARD,TOUCH (not shown)
9	CB-39912	CABLE,PCAP (not shown)
10	CB-46557	CABLE,USB,COMMUNICATION,0.5M (not shown)
11	CB-46664	CABLE, LVDS & BL. AMPIRE (not shown)
12	CC-46028	CONTROL CARD W/PROGRAM (not shown)

Control Package, Simple, 750 Series

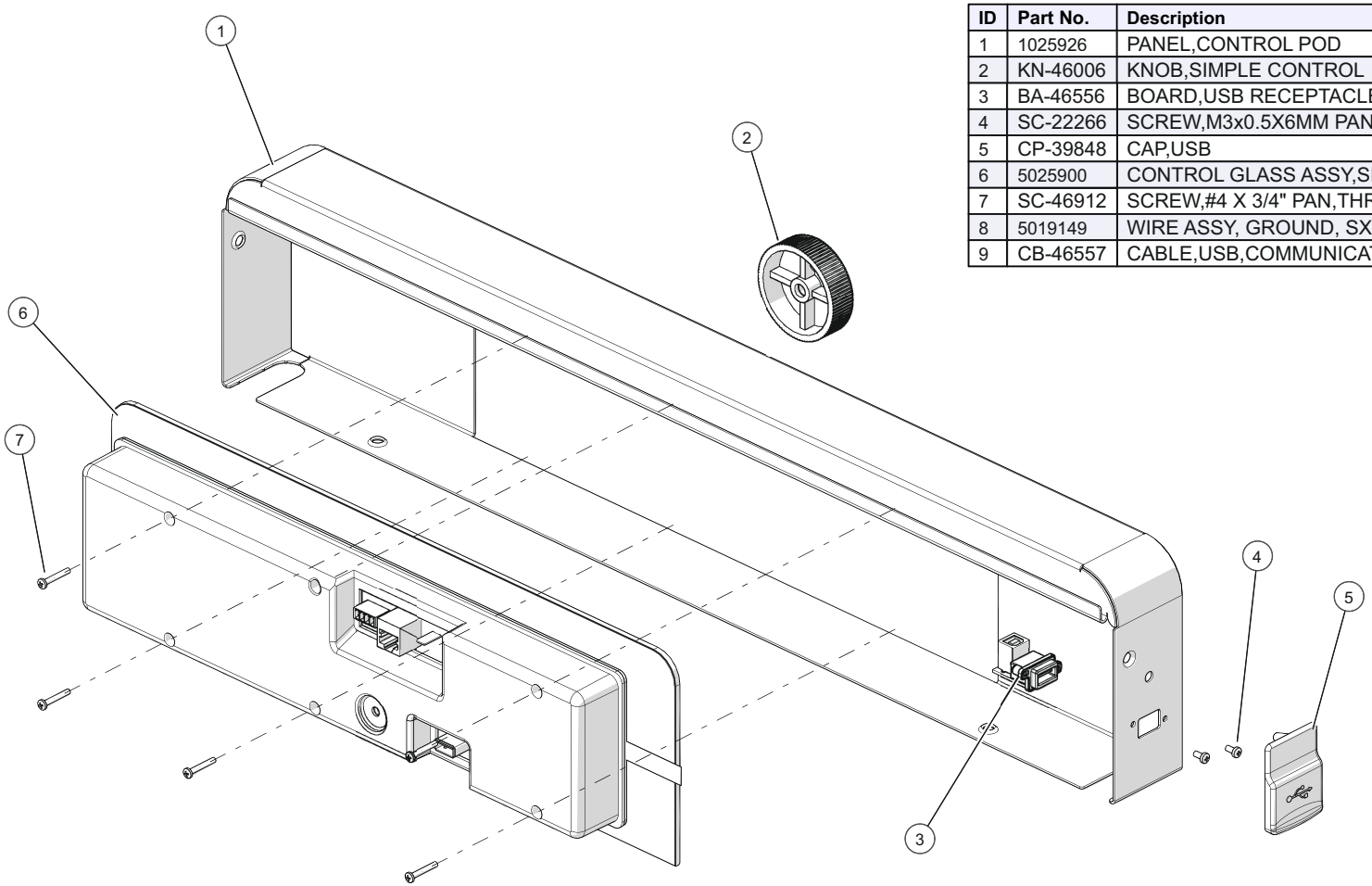

ID	Part No.	Description
1	1025926	PANEL,CONTROL POD
2	KN-46006	KNOB,SIMPLE CONTROL
3	BA-46556	BOARD,USB RECEPTACLE,90°
4	SC-22266	SCREW,M3x0.5X6MM PAN
5	CP-39848	CAP,USB
6	5025900	CONTROL GLASS ASSY,SIMPLE
7	SC-46912	SCREW,#4 X 3/4" PAN,THREAD CUT
8	5019149	WIRE ASSY, GROUND, SX (not shown)
9	CB-46557	CABLE,USB,COMMUNICATION,0.5M (not shown)

Control Package, Simple, 1000 Series

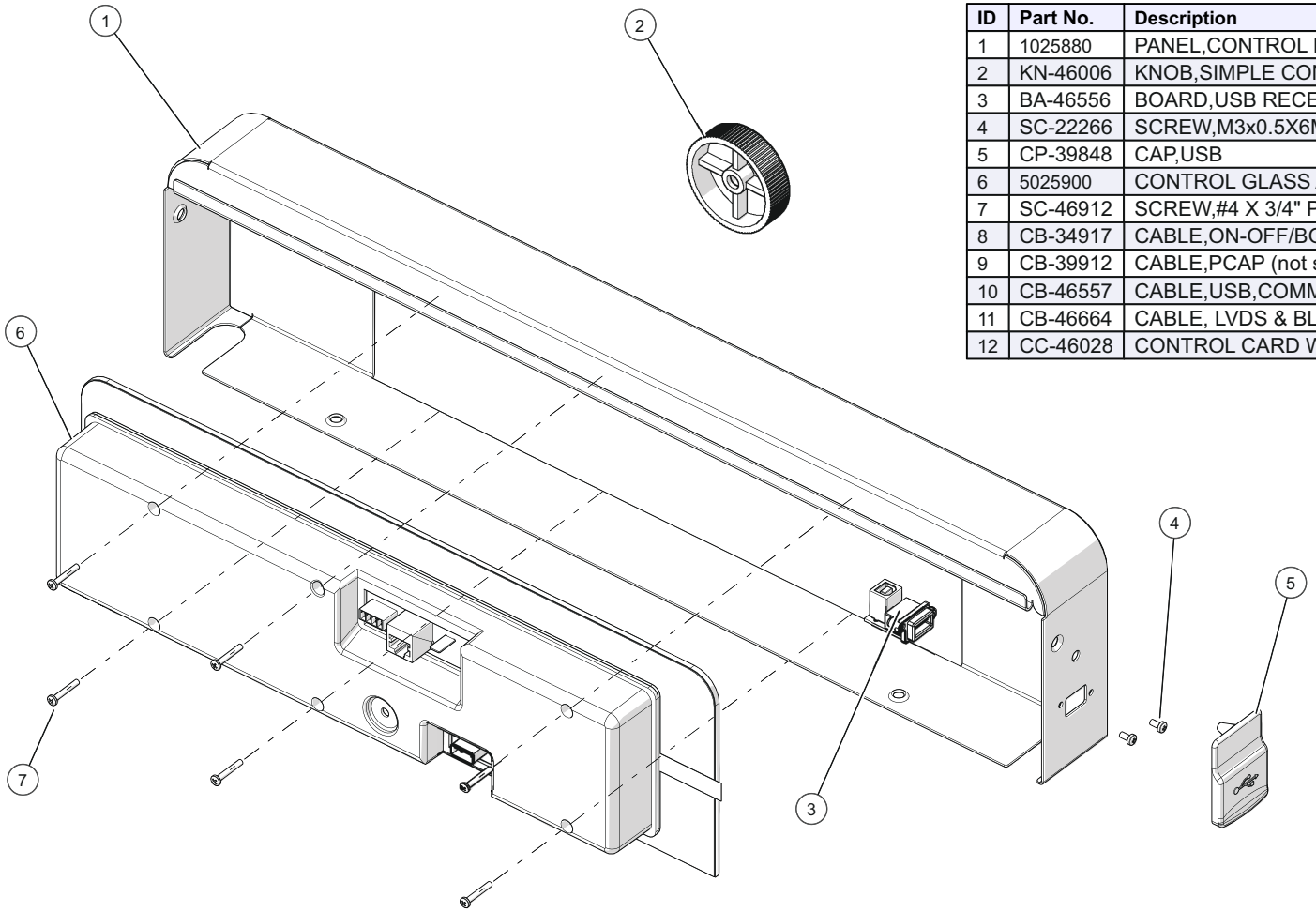

ID	Part No.	Description
1	1025880	PANEL,CONTROL POD
2	KN-46006	KNOB,SIMPLE CONTROL
3	BA-46556	BOARD,USB RECEPTACLE,90°
4	SC-22266	SCREW,M3x0.5X6MM PAN
5	CP-39848	CAP,USB
6	5025900	CONTROL GLASS ASSY,SIMPLE
7	SC-46912	SCREW,#4 X 3/4" PAN,THREAD CUT
8	CB-34917	CABLE,ON-OFF/BOARD,TOUCH (not shown)
9	CB-39912	CABLE,PCAP (not shown)
10	CB-46557	CABLE,USB,COMMUNICATION,0.5M (not shown)
11	CB-46664	CABLE, LVDS & BL AMPIRE (not shown)
12	CC-46028	CONTROL CARD W/PROGRAM (not shown)

Control Package, Simple, 1200 Series

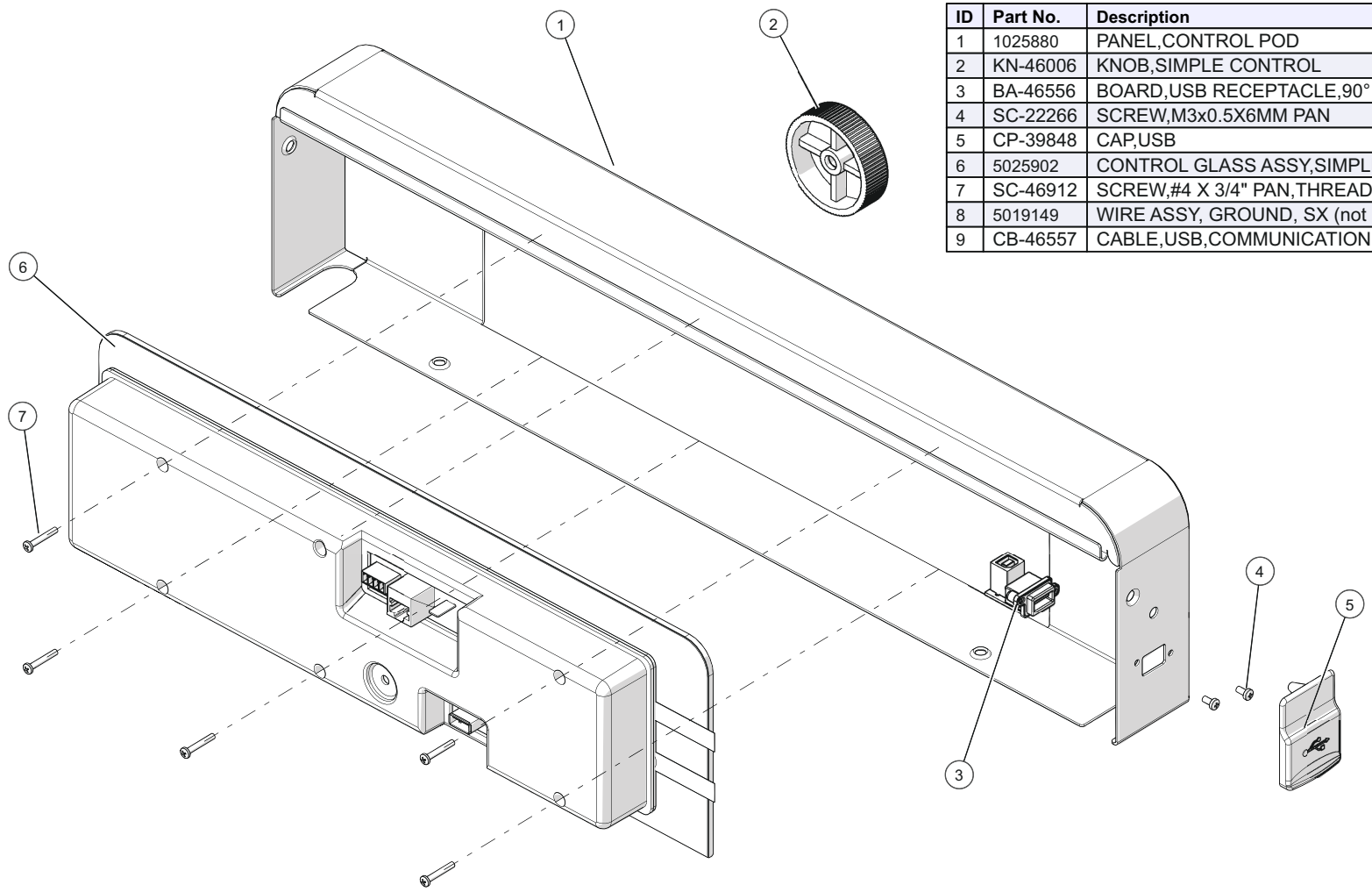

ID	Part No.	Description
1	1025880	PANEL,CONTROL POD
2	KN-46006	KNOB,SIMPLE CONTROL
3	BA-46556	BOARD,USB RECEPTACLE,90°
4	SC-22266	SCREW,M3x0.5X6MM PAN
5	CP-39848	CAP,USB
6	5025902	CONTROL GLASS ASSY,SIMPLE
7	SC-46912	SCREW,#4 X 3/4" PAN,THREAD CUT
8	5019149	WIRE ASSY, GROUND, SX (not shown)
9	CB-46557	CABLE,USB,COMMUNICATION,0.5M (not shown)

Control Package, Simple, 1750 Series

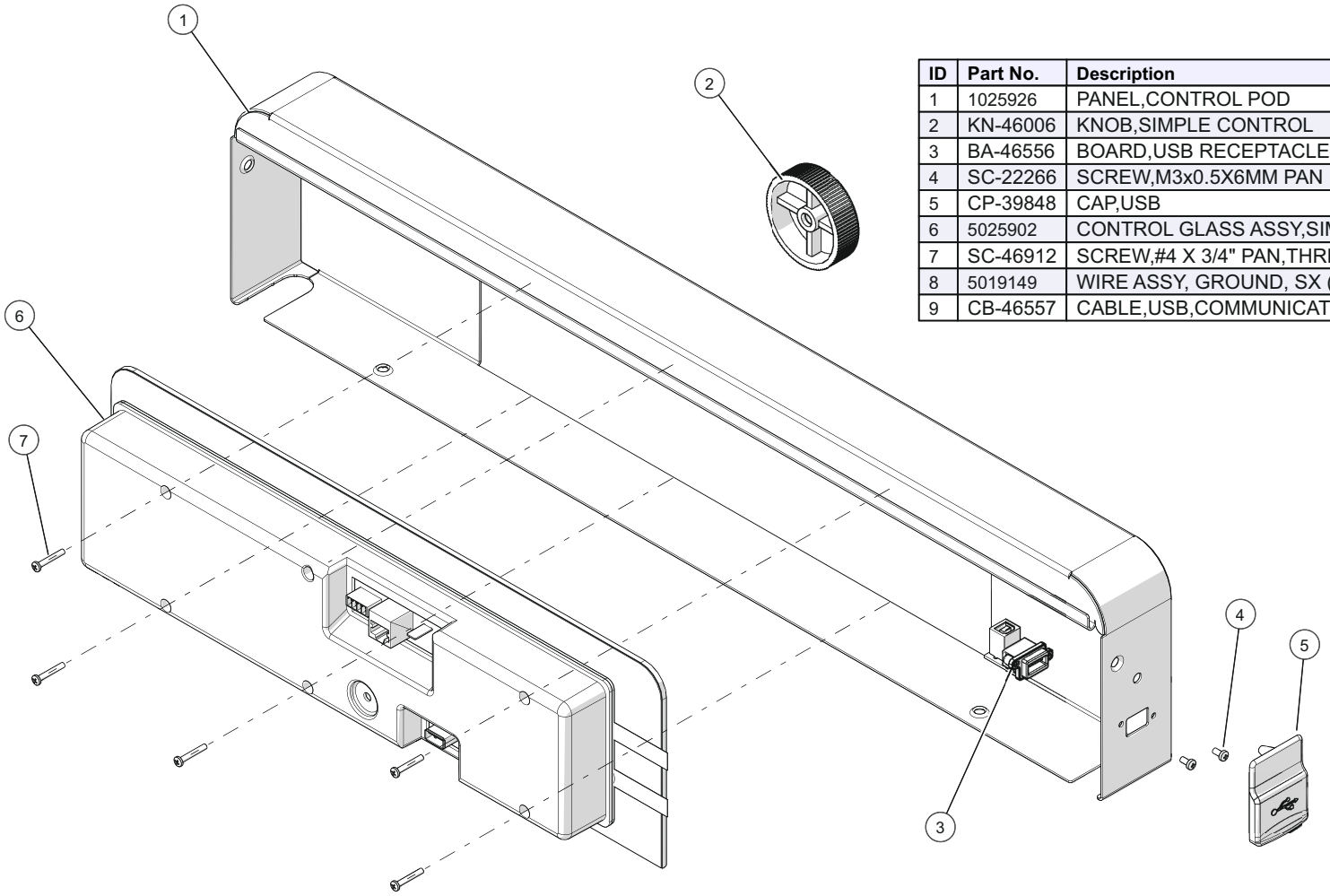

ID	Part No.	Description
1	1025926	PANEL,CONTROL POD
2	KN-46006	KNOB,SIMPLE CONTROL
3	BA-46556	BOARD,USB RECEPTACLE,90°
4	SC-22266	SCREW,M3x0.5X6MM PAN
5	CP-39848	CAP,USB
6	5025902	CONTROL GLASS ASSY,SIMPLE
7	SC-46912	SCREW,#4 X 3/4" PAN,THREAD CUT
8	5019149	WIRE ASSY, GROUND, SX (not shown)
9	CB-46557	CABLE,USB,COMMUNICATION,0.5M (not shown)

Door Assembly, Solid, 300 Series

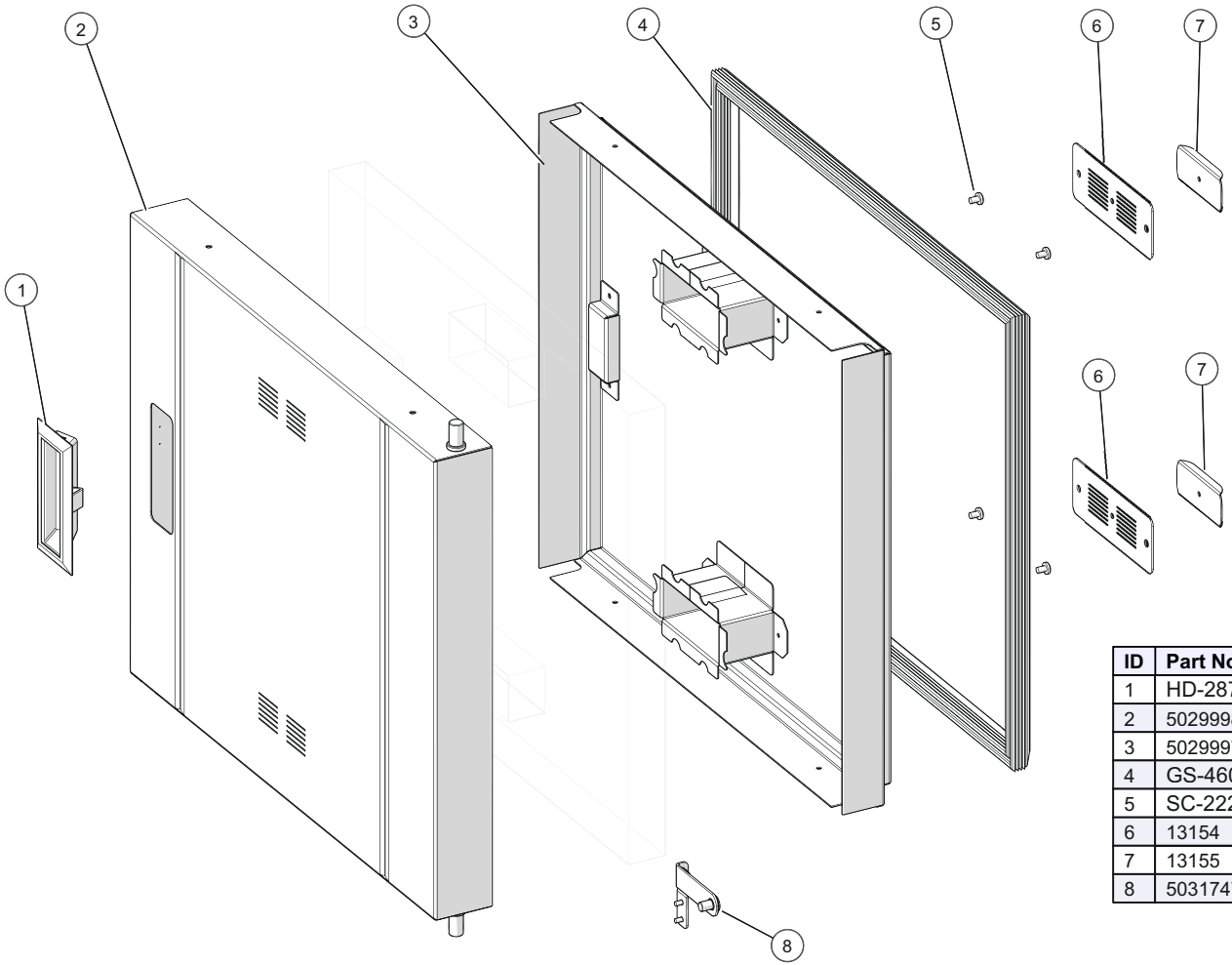

ID	Part No.	Description
1	HD-28789	HANDLE, PULL RECESSED, BLACK
2	5029998	WELD ASSY,OUTER,SOLID DOOR
3	5029997	WELD ASSY,INNER,SOLID DOOR
4	GS-46065	GASKET,DOOR,GREY
5	SC-22271	SCREW,M4x0.7X6MM PAN
6	13154	PLATE, DOOR VENT
7	13155	VENT COVER, TH/III
8	5031747	DOOR LATCH KIT (optional)

Door Assembly, Solid, RH, Simple 500 Series

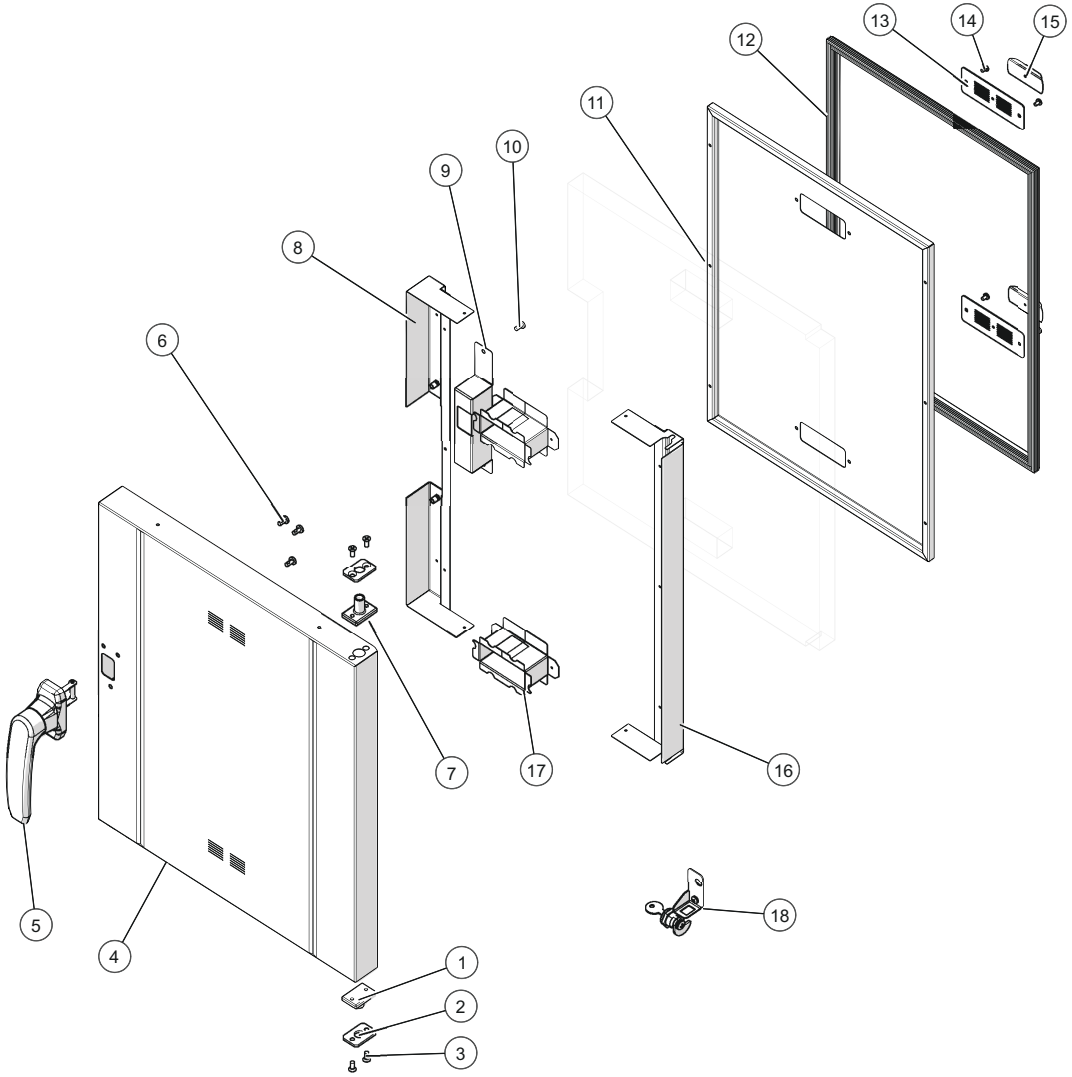

ID	Part No.	Description
1	HG-47157	HINGE PIN,BOTTOM,DOOR
2	HG-39656	HINGE,PLATE,DOOR PIN
3	SC-46158	SCREW,M5x0.8X12MM FLAT
4	1025910	PANEL,DOOR,OUTER,SOLID
5	HD-39262	HANDLE, DOOR, PENDLUM
6	SC-47158	SCREW, M5 X 10MM, PHH
7	HG-39655	HINGE,PIN,DOOR,ADJUSTABLE
8	5029855	PANEL,UPRIGHT,HANDLE,INSERTS
9	1032260	COVER,HANDLE,SOLID DOOR
10	SC-22766	SCREW,M5x0.8X10MM PAN
11	1025911	PANEL,DOOR,INNER,SOLID
12	GS-39695	GASKET,DOOR,GREY
13	13154	PLATE, DOOR VENT
14	SC-22271	SCREW,M4x0.7X6MM PAN
15	13155	VENT COVER, TH/III
16	1029873	PANEL,UPRIGHT,HINGE
17	1025959	TUBE,VENT,DOOR
18	5028755	DOOR LOCK ASSY (optional)

Door Assembly, Solid, LH, Simple 500 Series

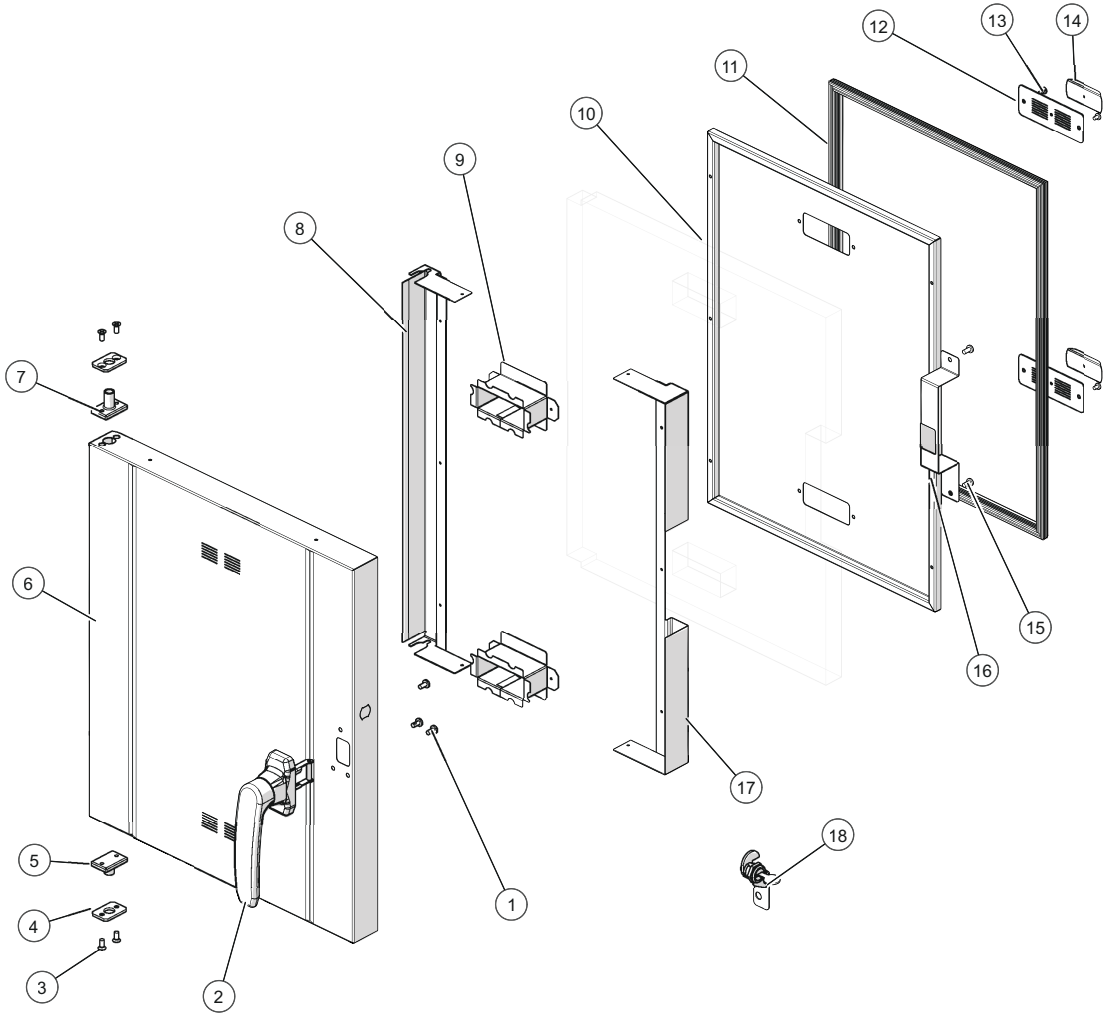

ID	Part No.	Description
1	SC-47158	SCREW, M5 X 10MM, PHH
2	HD-39326	HANDLE, DOOR, LEFT, AR-7
3	SC-46158	SCREW,M5x0.8X12MM FLAT
4	HG-39656	HINGE,PLATE,DOOR PIN
5	HG-47157	HINGE PIN,BOTTOM,DOOR
6	1025910	PANEL,DOOR,OUTER,SOLID
7	HG-39655	HINGE,PIN,DOOR,ADJUSTABLE
8	1029873	PANEL,UPRIGHT,HINGE
9	1025959	TUBE,VENT,DOOR
10	1025911	PANEL,DOOR,INNER,SOLID
11	GS-39695	GASKET,DOOR,GREY
12	13154	PLATE, DOOR VENT
13	SC-22271	SCREW,M4x0.7X6MM PAN
14	13155	VENT COVER, TH/III
15	SC-22766	SCREW,M5x0.8X10MM PAN
16	1032260	COVER,HANDLE,SOLID DOOR
17	5029855	PANEL,UPRIGHT,HANDLE,INSERTS
18	5028755	DOOR LOCK ASSY (optional)

Door Assembly, Window, RH, Simple 500 Series

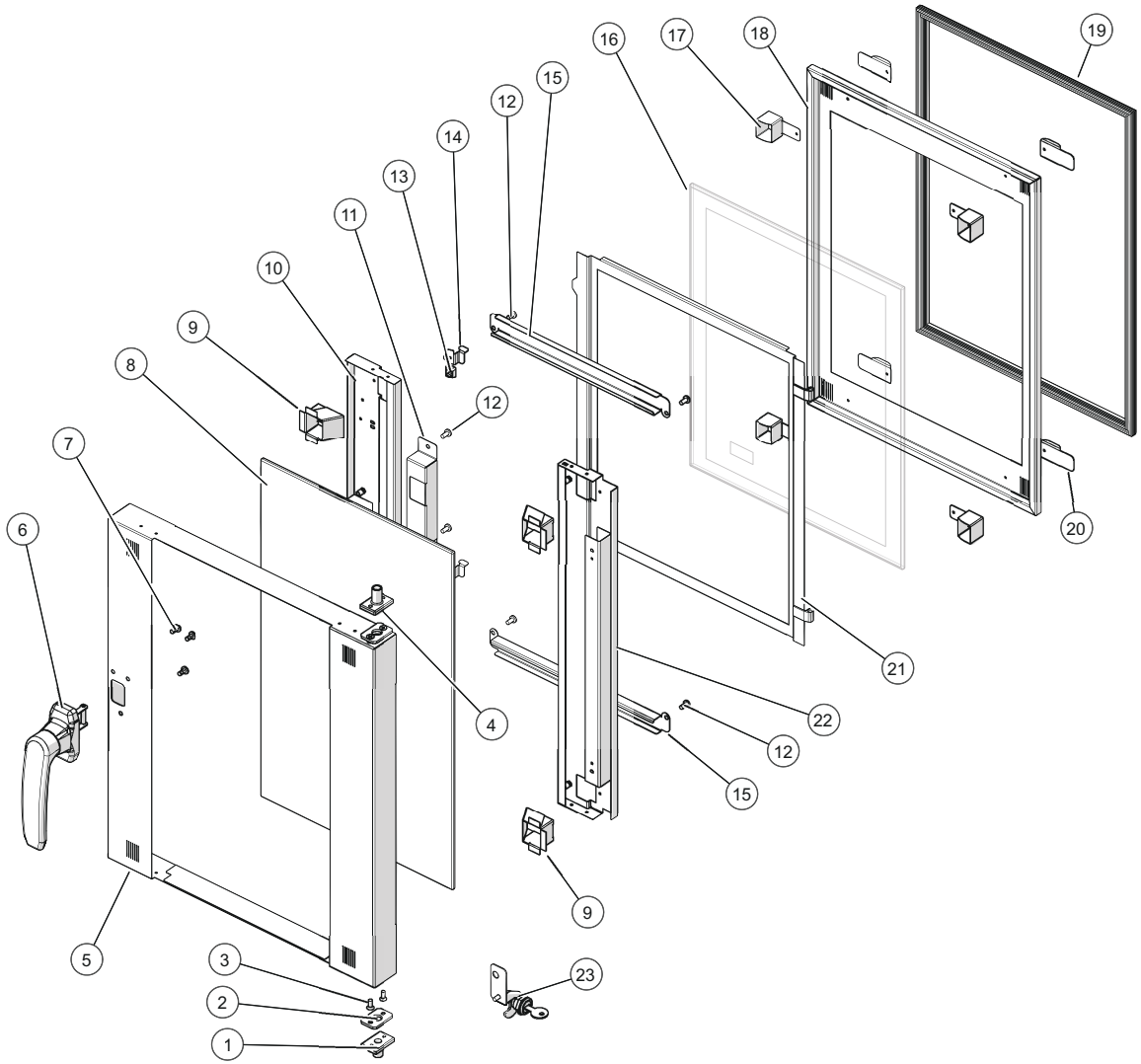

ID	Part No.	Description
1	HG-47157	HINGE PIN,BOTTOM,DOOR
2	HG-39656	HINGE,PLATE,DOOR PIN
3	SC-46158	SCREW,M5x0.8X12MM FLAT
4	HG-39655	HINGE,PIN,DOOR,ADJUSTABLE
5	1026596	PANEL,DOOR,OUTER,WINDOW
6	HD-39262	HANDLE, DOOR, PENDLUM
7	SC-47158	SCREW, M5 X 10MM, PHH
8	GL-39590	GLASS,6MM,OUTER,DOOR,C&H
9	5030989	TUBE,VENT,WELD ASSY
10	5030675	ASSY,BRACKET,HANDLE SUPRT,SX
11	1030841	COVER,HANDLE,WINDOW DOOR
12	SC-22766	SCREW,M5x0.8X10MM PAN
13	SP-36060	SPACER, INNER GLASS TABLE TOP
14	1026001	CLIP,LATCH,DOOR,INNER,WINDOW
15	1031277	CHANNEL,CABLE,WINDOW DOOR
16	GL-39591	GLASS,6MM,INNER,DOOR
17	1034288	VENT TUBE,WINDOW DOOR
18	1026600	PANEL,DOOR,INNER,WINDOW
19	GS-39695	GASKET,DOOR,GREY
20	1034186	VENT COVER,WINDOW DOOR
21	5028063	ASSY,WELD,INNER DOOR PANEL
22	5031430	ASSY,WELD,HINGE SUPRT,SX,RH
23	5028755	DOOR LOCK ASSY (optional)

Door Assembly, Window, LH, Simple 500 Series

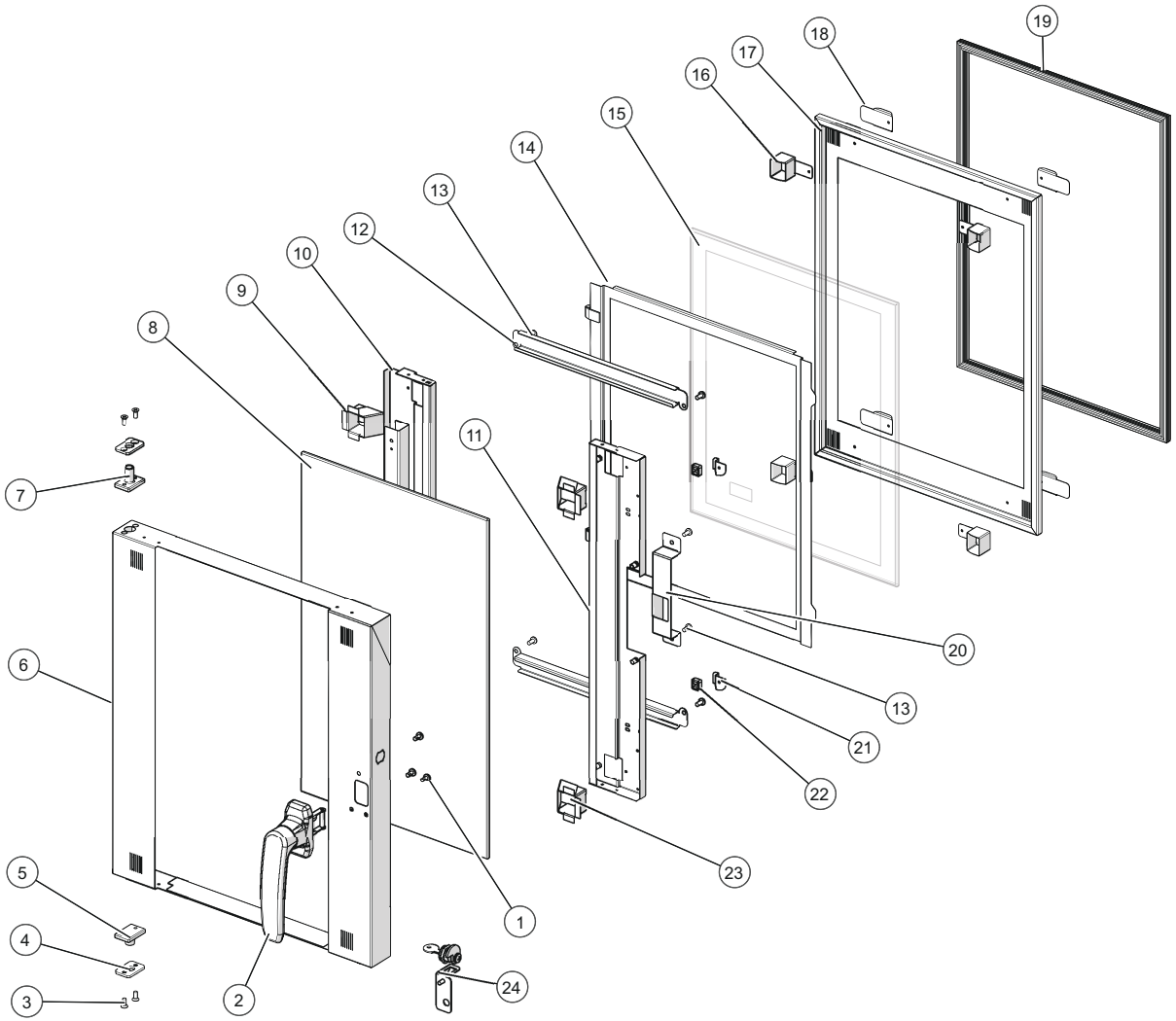

ID	Part No.	Description
1	SC-47158	SCREW, M5 X 10MM, PHH
2	HD-39326	HANDLE, DOOR, LEFT, AR-7
3	SC-46158	SCREW,M5x0.8X12MM FLAT
4	HG-39656	HINGE,PLATE,DOOR PIN
5	HG-47157	HINGE PIN,BOTTOM,DOOR
6	1026596	PANEL,DOOR,OUTER,WINDOW
7	HG-39655	HINGE,PIN,DOOR,ADJUSTABLE
8	GL-39590	GLASS,6MM,OUTER,DOOR,C&H
9	5030989	TUBE,VENT,WELD ASSY
10	5030674	ASSY,WELD,HINGE SUPRT,SX,LH
11	5030675	ASSY,BRACKET,HANDLE SUPRT,SX
12	1031277	CHANNEL,CABLE,WINDOW DOOR
13	SC-22766	SCREW,M5x0.8X10MM PAN
14	5028063	ASSY,WELD,INNER DOOR PANEL
15	GL-39591	GLASS,6MM,INNER,DOOR
16	1034288	VENT TUBE,WINDOW DOOR
17	1026600	PANEL,DOOR,INNER,WINDOW
18	1034186	VENT COVER,WINDOW DOOR
19	GS-39695	GASKET,DOOR,GREY
20	1030841	COVER,HANDLE,WINDOW DOOR
21	1026001	CLIP,LATCH,DOOR,INNER,WINDOW
22	SP-36060	SPACER, INNER GLASS TABLE TOP
23	5030989	TUBE,VENT,WELD ASSY
24	5028755	DOOR LOCK ASSY (optional)

Door Assembly, Solid, RH, Simple 750/1750 Series

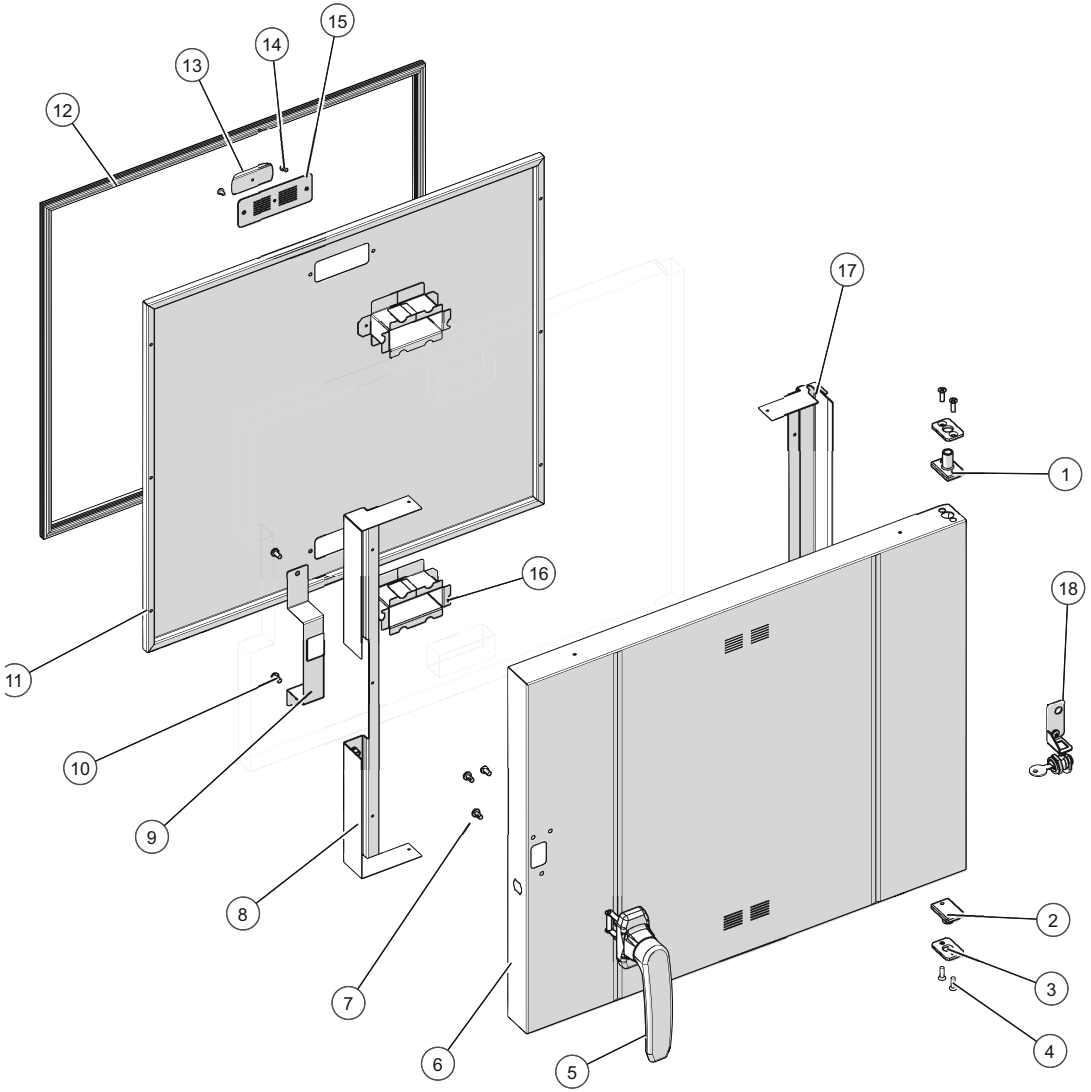

ID	Part No.	Description
1	HG-39655	HINGE,PIN,DOOR,ADJUSTABLE
2	HG-47157	HINGE PIN,BOTTOM,DOOR
3	HG-39656	HINGE,PLATE,DOOR PIN
4	SC-22281	SCREW,M5x0.8X16MM FLAT
5	HD-39262	HANDLE, DOOR, PENDLUM
6	1025930	PANEL,DOOR,OUTER,SOLID
7	SC-47158	SCREW, M5 X 10MM, PHH
8	5029855	PANEL,UPRIGHT,HANDLE,INSERTS
9	1032260	COVER,HANDLE,SOLID DOOR
10	SC-22766	SCREW,M5x0.8X10MM PAN
11	1025931	PANEL,DOOR,INNER,SOLID
12	GS-39696	GASKET,DOOR,GREY
13	13155	VENT COVER, TH/III
14	SC-22271	SCREW,M4x0.7X6MM PAN
15	13154	PLATE, DOOR VENT
16	1025959	TUBE,VENT,DOOR
17	1029873	PANEL,UPRIGHT,HINGE
18	5028755	DOOR LOCK ASSY (optional)

Door Assembly, Solid, LH, Simple 750/1750 Series

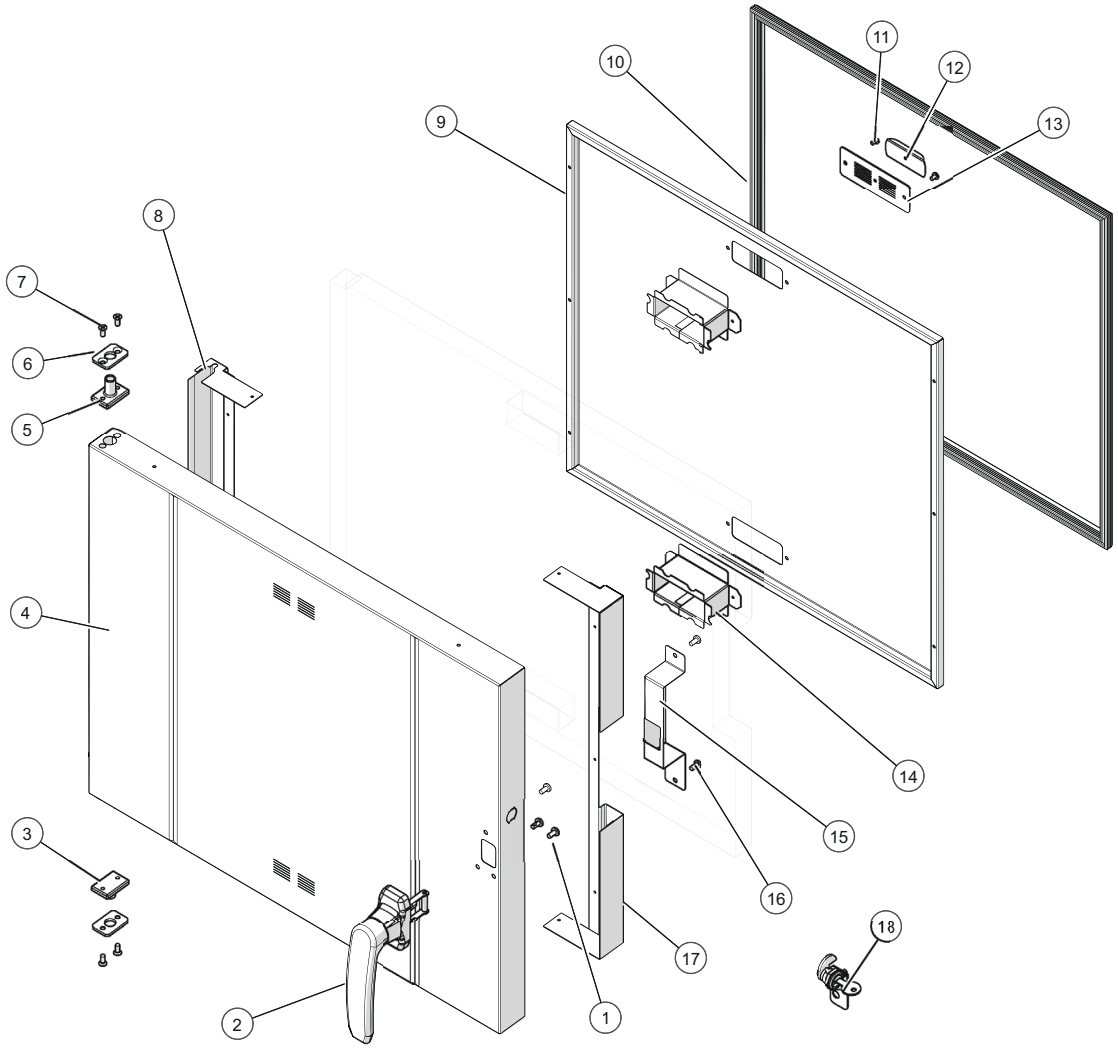

ID	Part No.	Description
1	SC-47158	SCREW, M5 X 10MM, PHH
2	HD-39326	HANDLE, DOOR, LEFT, AR-7
3	HG-47157	HINGE PIN,BOTTOM,DOOR
4	1025930	PANEL,DOOR,OUTER,SOLID
5	HG-39655	HINGE,PIN,DOOR,ADJUSTABLE
6	HG-39656	HINGE,PLATE,DOOR PIN
7	SC-46158	SCREW,M5x0.8X12MM FLAT
8	1029873	PANEL,UPRIGHT,HINGE
9	1025931	PANEL,DOOR,INNER,SOLID
10	GS-39696	GASKET,DOOR,GREY
11	SC-22271	SCREW,M4x0.7X6MM PAN
12	13155	VENT COVER, TH/III
13	13154	PLATE, DOOR VENT
14	1025959	TUBE,VENT,DOOR
15	1032260	COVER,HANDLE,SOLID DOOR
16	SC-22766	SCREW,M5x0.8X10MM PAN
17	5029855	PANEL,UPRIGHT,HANDLE,INSERTS
18	5028755	DOOR LOCK ASSY (optional)

Door Assembly, Window, RH, Simple 750/1750 Series

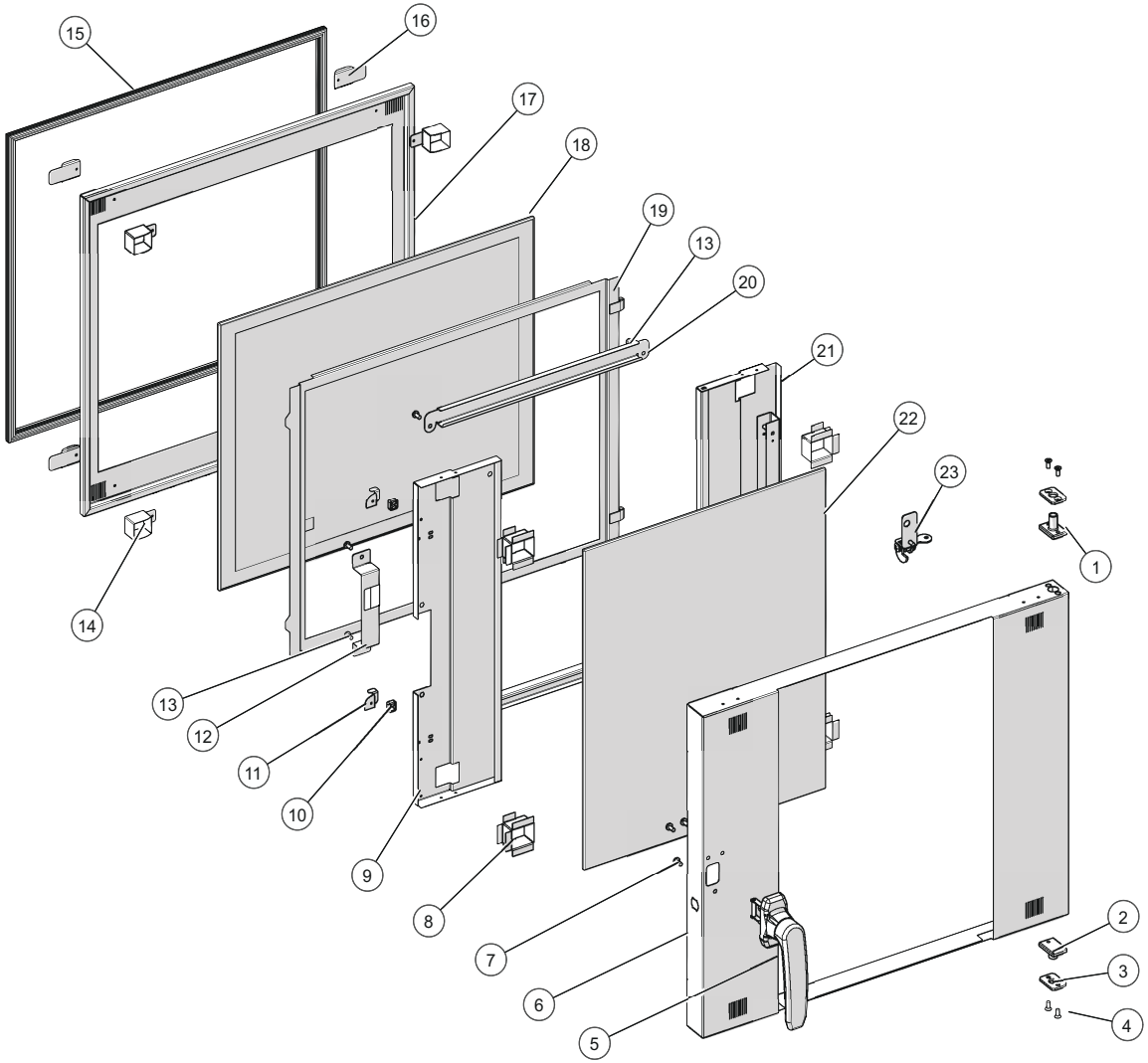

ID	Part No.	Description
1	HG-39655	HINGE,PIN,DOOR,ADJUSTABLE
2	HG-47157	HINGE PIN,BOTTOM,DOOR
3	HG-39656	HINGE,PLATE,DOOR PIN
4	SC-46158	SCREW,M5x0.8X12MM FLAT
5	HD-39262	HANDLE, DOOR, PENDLUM
6	1026296	PANEL,DOOR,OUTER,WINDOW
7	SC-47158	SCREW, M5 X 10MM, PHH
8	1030829	TUBE,VENT,DOOR
9	5030672	ASSY,BRACKET,HANDLE SUPRT,SX
10	SP-36060	SPACER, INNER GLASS TABLE TOP
11	1026001	CLIP,LATCH,DOOR,INNER,WINDOW
12	1030841	COVER,HANDLE,WINDOW DOOR
13	SC-22766	SCREW,M5x0.8X10MM PAN
14	1034185	VENT TUBE,WINDOW DOOR
15	GS-39696	GASKET,DOOR,GREY
16	1034186	VENT COVER,WINDOW DOOR
17	1026595	PANEL,DOOR,INNER,WINDOW
18	GL-39593	GLASS,6MM,INNER,DOOR
19	5027711	ASSY,WELD,INNER DOOR PANEL
20	1030826	CHANNEL,CABLE,WINDOW DOOR
21	5031378	ASSY,WELD,HINGE SUPRT,SX,RH
22	GL-39592	GLASS,6MM,OUTER,DOOR,C&H
23	5028755	DOOR LOCK ASSY (optional)

Door Assembly, Window, LH, Simple 750/1750 Series

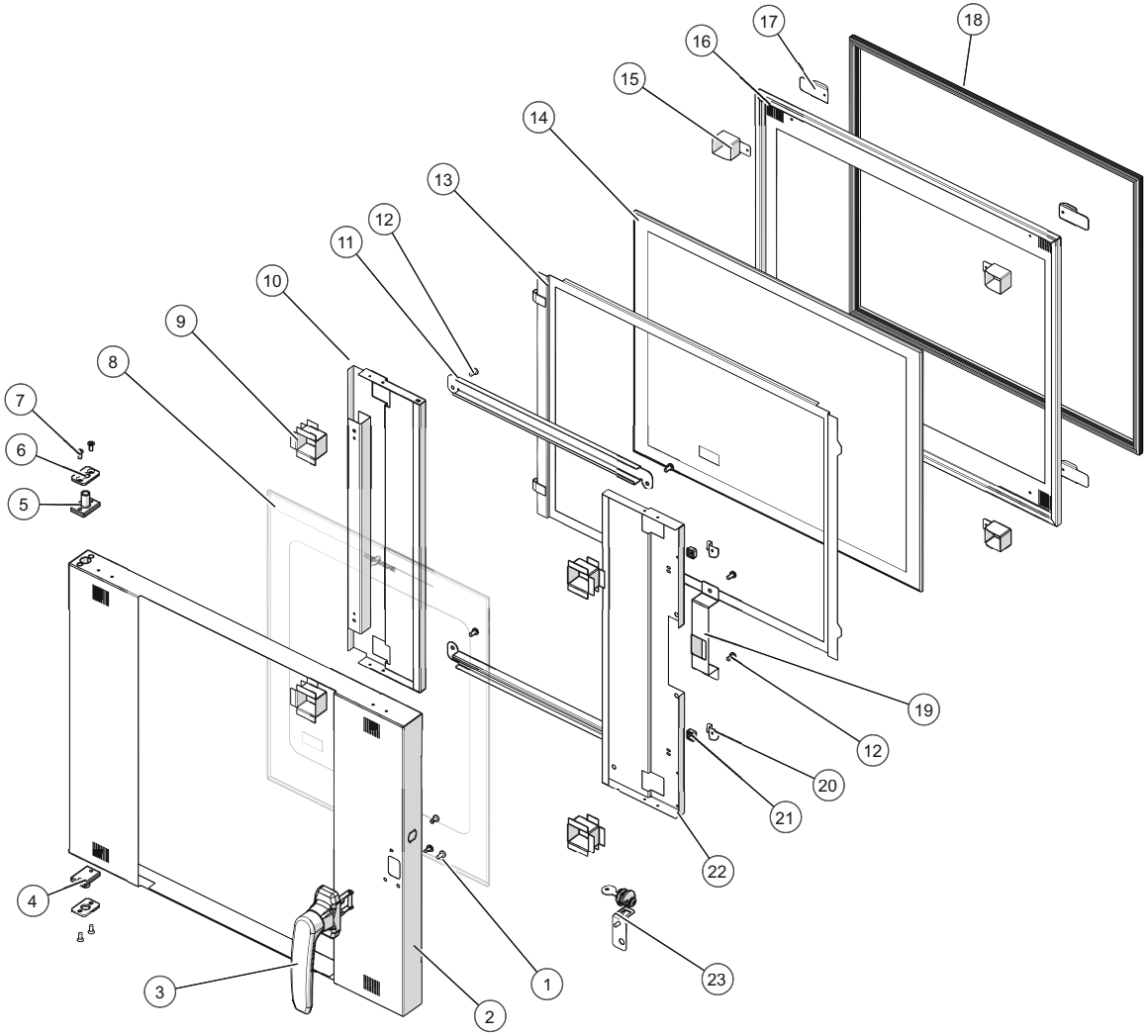

ID	Part No.	Description
1	SC-47158	SCREW, M5 X 10MM, PHH
2	1026296	PANEL,DOOR,OUTER,WINDOW
3	HD-39326	HANDLE, DOOR, LEFT, AR-7
4	HG-47157	HINGE PIN,BOTTOM,DOOR
5	HG-39655	HINGE,PIN,DOOR,ADJUSTABLE
6	HG-39656	HINGE,PLATE,DOOR PIN
7	SC-46158	SCREW,M5x0.8X12MM FLAT
8	GL-39592	GLASS,6MM,OUTER,DOOR,C&H
9	1030829	TUBE,VENT,DOOR
10	5030673	ASSY,WELD,HINGE SUPRT,SX,LH
11	1030826	CHANNEL,CABLE,WINDOW DOOR
12	SC-22766	SCREW,M5x0.8X10MM PAN
13	5027711	ASSY,WELD,INNER DOOR PANEL
14	GL-39593	GLASS,6MM,INNER,DOOR
15	1034185	VENT TUBE,WINDOW DOOR
16	1026595	PANEL,DOOR,INNER,WINDOW
17	1034186	VENT COVER,WINDOW DOOR
18	GS-39696	GASKET,DOOR,GREY
19	1030841	COVER,HANDLE,WINDOW DOOR
20	1026001	CLIP,LATCH,DOOR,INNER,WINDOW
21	SP-36060	SPACER, INNER GLASS TABLE TOP
22	5030672	ASSY,BRACKET,HANDLE SUPRT,SX
23	5028755	DOOR LOCK ASSY (optional)

Door Assembly, Solid, RH, Simple 1000/1200 Series

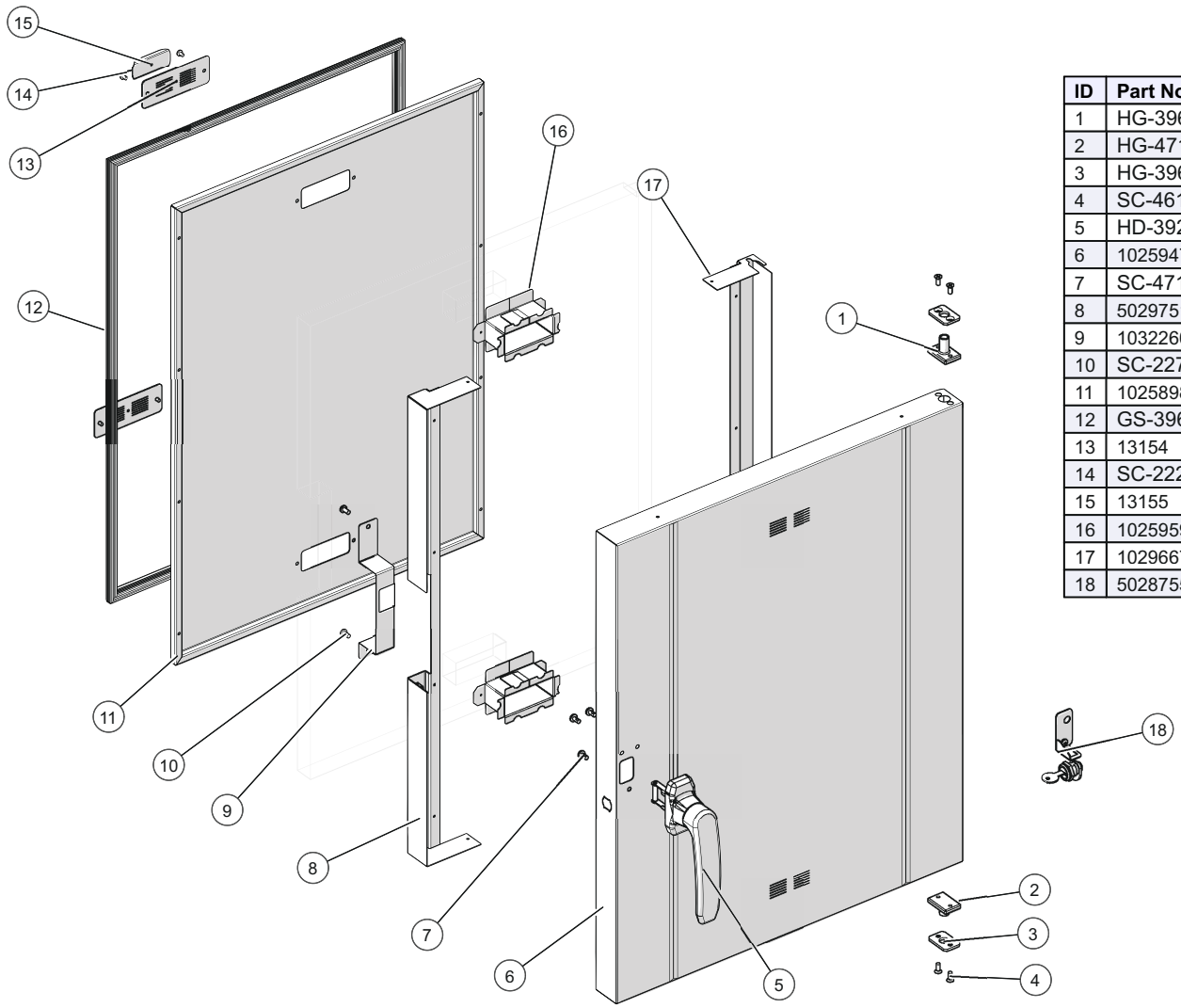

ID	Part No.	Description
1	HG-39655	HINGE,PIN,DOOR,ADJUSTABLE
2	HG-47157	HINGE PIN,BOTTOM,DOOR
3	HG-39656	HINGE,PLATE,DOOR PIN
4	SC-46158	SCREW,M5x0.8X12MM FLAT
5	HD-39262	HANDLE, DOOR, PENDLUM
6	1025947	PANEL,DOOR,OUTER,SOLID
7	SC-47158	SCREW, M5 X 10MM, PHH
8	5029751	PANEL,UPRIGHT,HANDLE,INSERTS
9	1032260	COVER,HANDLE,SOLID DOOR
10	SC-22766	SCREW,M5x0.8X10MM PAN
11	1025898	PANEL,DOOR,INNER,SOLID
12	GS-39694	GASKET,DOOR,GREY
13	13154	PLATE, DOOR VENT
14	SC-22271	SCREW,M4x0.7X6MM PAN
15	13155	VENT COVER, TH/III
16	1025959	TUBE,VENT,DOOR
17	1029667	PANEL,UPRIGHT,HINGE
18	5028755	DOOR LOCK ASSY (optional)

Door Assembly, Solid, LH, Simple 1000/1200 Series

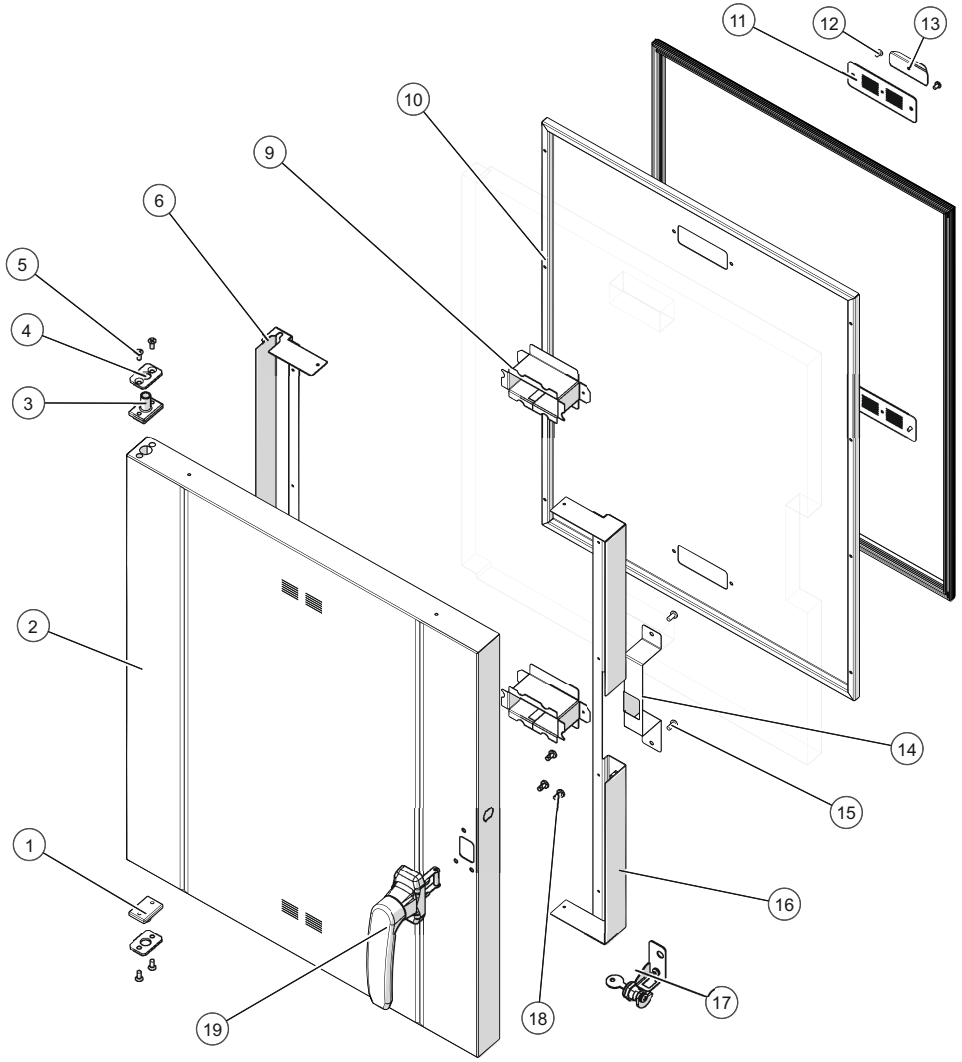

ID	Part No.	Description
1	HG-47157	HINGE PIN,BOTTOM,DOOR
2	1025947	PANEL,DOOR,OUTER,SOLID
3	HG-39655	HINGE,PIN,DOOR,ADJUSTABLE
4	HG-39656	HINGE,PLATE,DOOR PIN
5	SC-46158	SCREW,M5x0.8X12MM FLAT
6	1029667	PANEL,UPRIGHT,HINGE
9	1025959	TUBE,VENT,DOOR
10	1025898	PANEL,DOOR,INNER,SOLID
11	13154	PLATE, DOOR VENT
12	SC-22271	SCREW,M4x0.7X6MM PAN
13	13155	VENT COVER, TH/III
14	1032260	COVER,HANDLE,SOLID DOOR
15	SC-22766	SCREW,M5x0.8X10MM PAN
16	5029751	PANEL,UPRIGHT,HANDLE,INSERTS
17	5028755	DOOR LOCK ASSY (optional)
18	SC-47158	SCREW, M5 X 10MM, PHH
19	HD-39326	HANDLE, DOOR, LEFT, AR-7

Door Assembly, Window, RH, Simple 1000/1200 Series

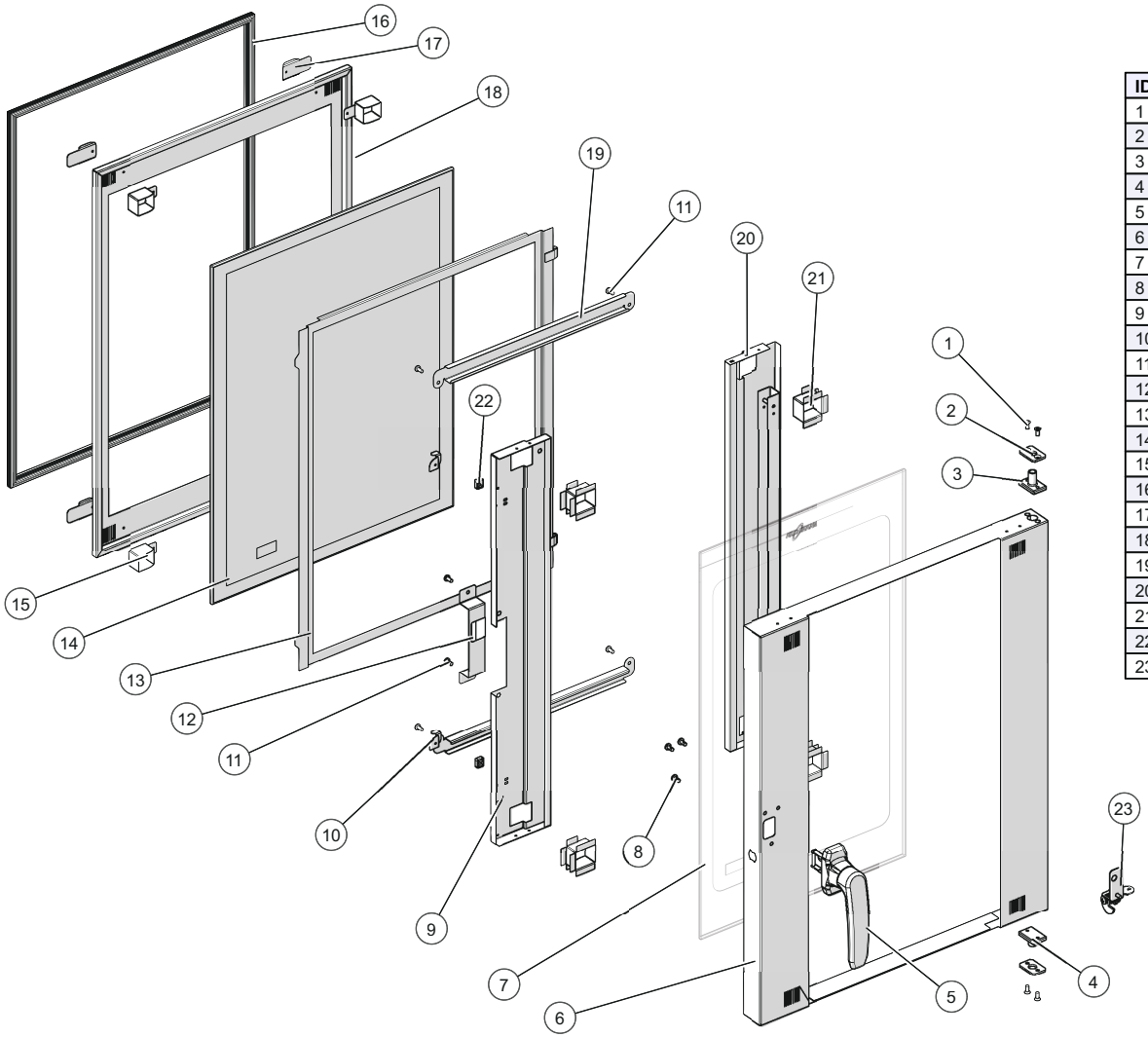

ID	Part No.	Description
1	SC-46158	SCREW,M5x0.8X12MM FLAT
2	HG-39656	HINGE,PLATE,DOOR PIN
3	HG-39655	HINGE,PIN,DOOR,ADJUSTABLE
4	HG-47157	HINGE PIN,BOTTOM,DOOR
5	HD-39262	HANDLE, DOOR, PENDLUM
6	1025992	PANEL,DOOR,OUTER,WINDOW
7	GL-39586	GLASS,6MM,OUTER,DOOR,C&H
8	SC-47158	SCREW, M5 X 10MM, PHH
9	5030671	ASSY,BRACKET,HANDLE SUPRT,SX
10	1026001	CLIP,LATCH,DOOR,INNER,WINDOW
11	SC-22766	SCREW,M5x0.8X10MM PAN
12	1030841	COVER,HANDLE,WINDOW DOOR
13	5027480	ASSY,WELD,INNER DOOR PANEL
14	GL-39587	GLASS,6MM,INNER,DOOR
15	1034185	VENT TUBE,WINDOW DOOR
16	GS-39694	GASKET,DOOR,GREY
17	1034186	VENT COVER,WINDOW DOOR
18	1025995	PANEL,DOOR,INNER,WINDOW
19	1030826	CHANNEL,CABLE,WINDOW DOOR
20	5030670	ASSY,WELD,HINGE SUPRT,SX,RH
21	1030829	TUBE,VENT,DOOR
22	SP-36060	SPACER, INNER GLASS TABLE TOP
23	5028755	DOOR LOCK ASSY (optional)

Door Assembly, Window, LH, Simple 1000/1200 Series

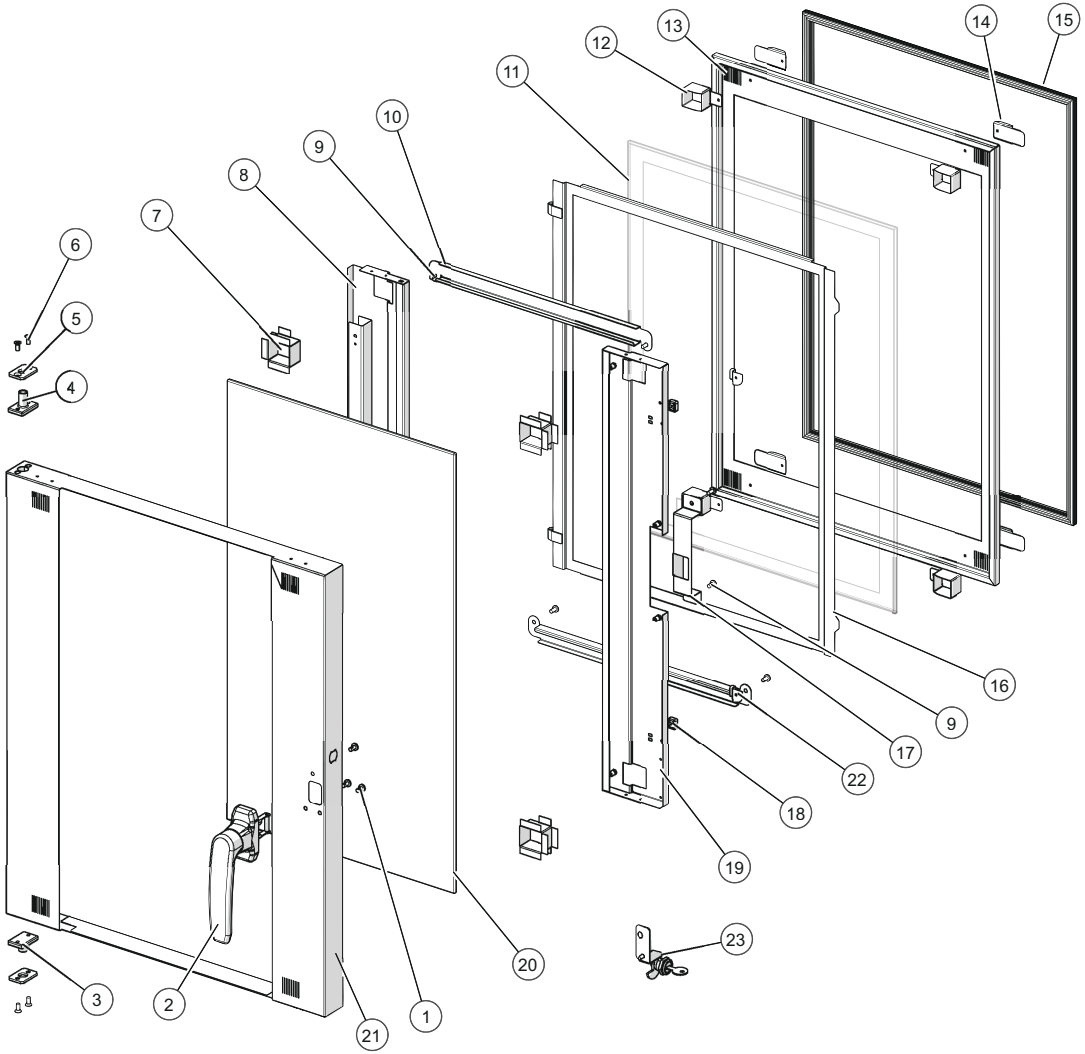

ID	Part No.	Description
1	SC-47158	SCREW, M5 X 10MM, PHH
2	HD-39326	HANDLE, DOOR, LEFT, AR-7
3	HG-47157	HINGE PIN,BOTTOM,DOOR
4	HG-39655	HINGE,PIN,DOOR,ADJUSTABLE
5	HG-39656	HINGE,PLATE,DOOR PIN
6	SC-46158	SCREW,M5x0.8X12MM FLAT
7	1030829	TUBE,VENT,DOOR
8	5031329	ASSY,WELD,HINGE SUPRT,SX,LH
9	SC-22766	SCREW,M5x0.8X10MM PAN
10	1030826	CHANNEL,CABLE,WINDOW DOOR
11	GL-39587	GLASS,6MM,INNER,DOOR
12	1034185	VENT TUBE,WINDOW DOOR
13	1025995	PANEL,DOOR,INNER,WINDOW
14	1034186	VENT COVER,WINDOW DOOR
15	GS-39694	GASKET,DOOR,GREY
16	5027480	ASSY,WELD,INNER DOOR PANEL
17	1030841	COVER,HANDLE,WINDOW DOOR
18	SP-36060	SPACER, INNER GLASS TABLE TOP
19	5030671	ASSY,BRACKET,HANDLE SUPRT,SX
20	GL-39586	GLASS,6MM,OUTER,DOOR,C&H
21	1025992	PANEL,DOOR,OUTER,WINDOW
22	1026001	CLIP,LATCH,DOOR,INNER,WINDOW
23	5028755	DOOR LOCK ASSY (optional)

Electrical Chassis, 120V, 300 Series

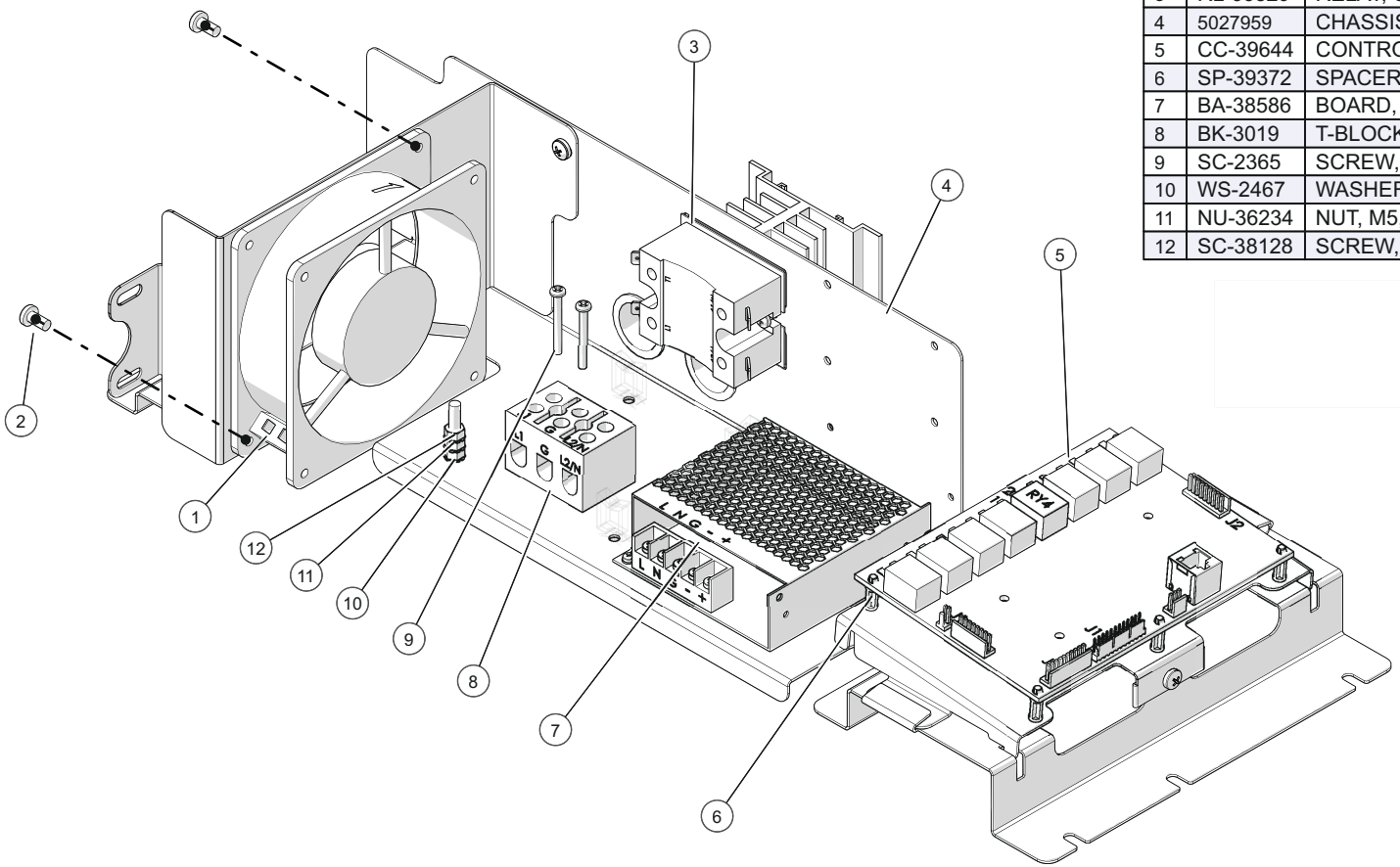

ID	Part No.	Description
1	FA-36170	FAN, AXIAL 115V 117CFM
2	SC-22766	SCREW,M5x0.8X10MM PAN
3	RL-33829	RELAY, SOLID STATE, 230V, 25A
4	5027959	CHASSIS MTG,ASSY,WITH INSERTS
5	CC-39644	CONTROL BOARD,DELUXE,C&H
6	SP-39372	SPACER, LOCK-IN SUPPRT
7	BA-38586	BOARD, POWER SUPPLY, 12V
8	BK-3019	T-BLOCK
9	SC-2365	SCREW,6-32X1-1/4,NC PHILLIPS
10	WS-2467	WASHER, INT. LOCK
11	NU-36234	NUT, M5, KEPS
12	SC-38128	SCREW,PAN PH, METRIC, M5

Electrical Chassis, 120V, 500 Series

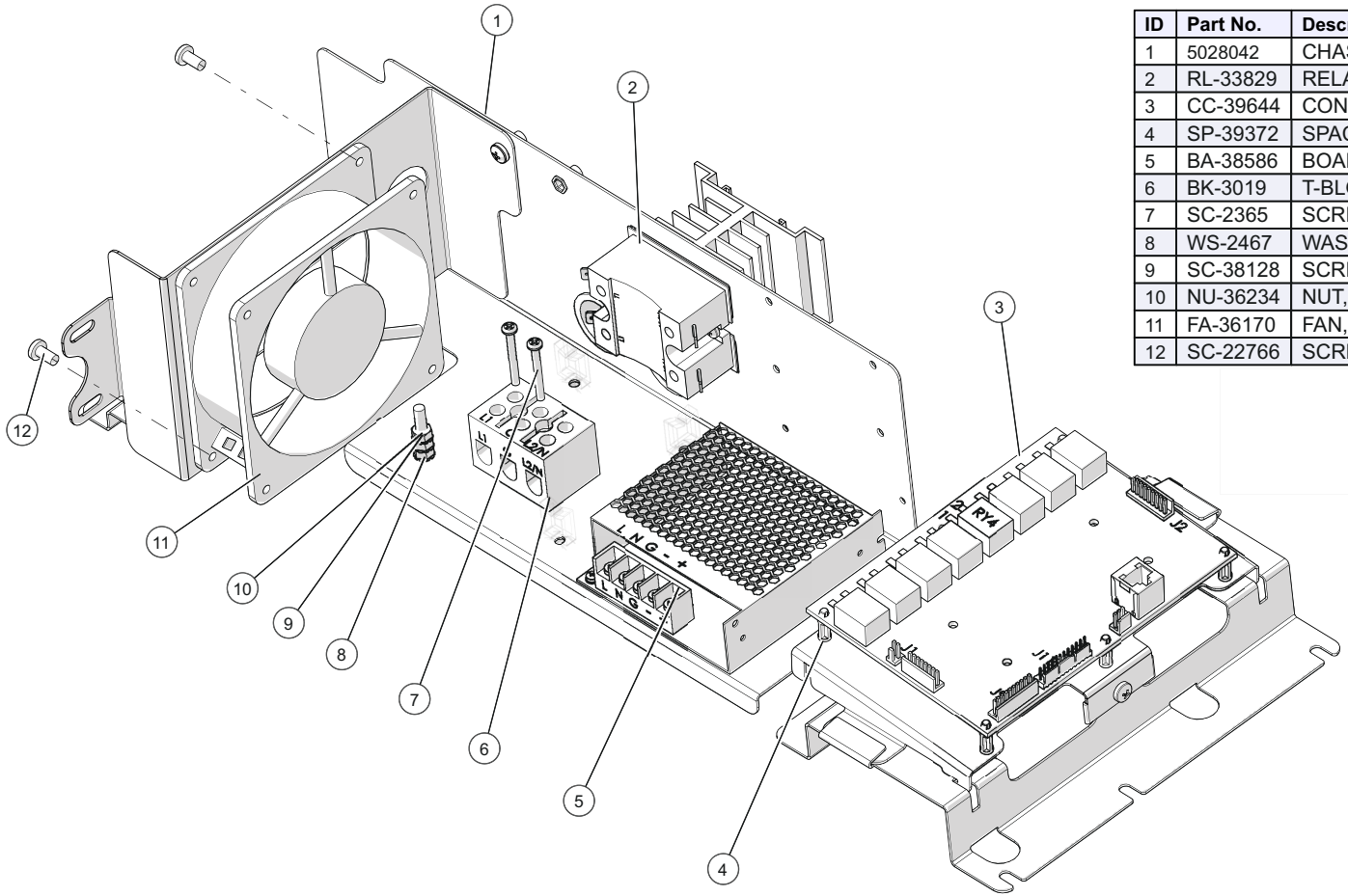

ID	Part No.	Description
1	5028042	CHASSIS MTG,ASSY,WITH INSERTS
2	RL-33829	RELAY, SOLID STATE, 230V, 25A
3	CC-39644	CONTROL BOARD,DELUXE,C&H
4	SP-39372	SPACER, LOCK-IN SUPPRT
5	BA-38586	BOARD, POWER SUPPLY, 12V
6	BK-3019	T-BLOCK
7	SC-2365	SCREW,6-32X1-1/4,NC PHILLIPS
8	WS-2467	WASHER, INT. LOCK
9	SC-38128	SCREW,PAN PH, METRIC, M5
10	NU-36234	NUT, M5, KEPS
11	FA-36170	FAN, AXIAL 115V 117CFM
12	SC-22766	SCREW,M5x0.8X10MM PAN

Electrical Chassis, 120V, 750/1000 Series

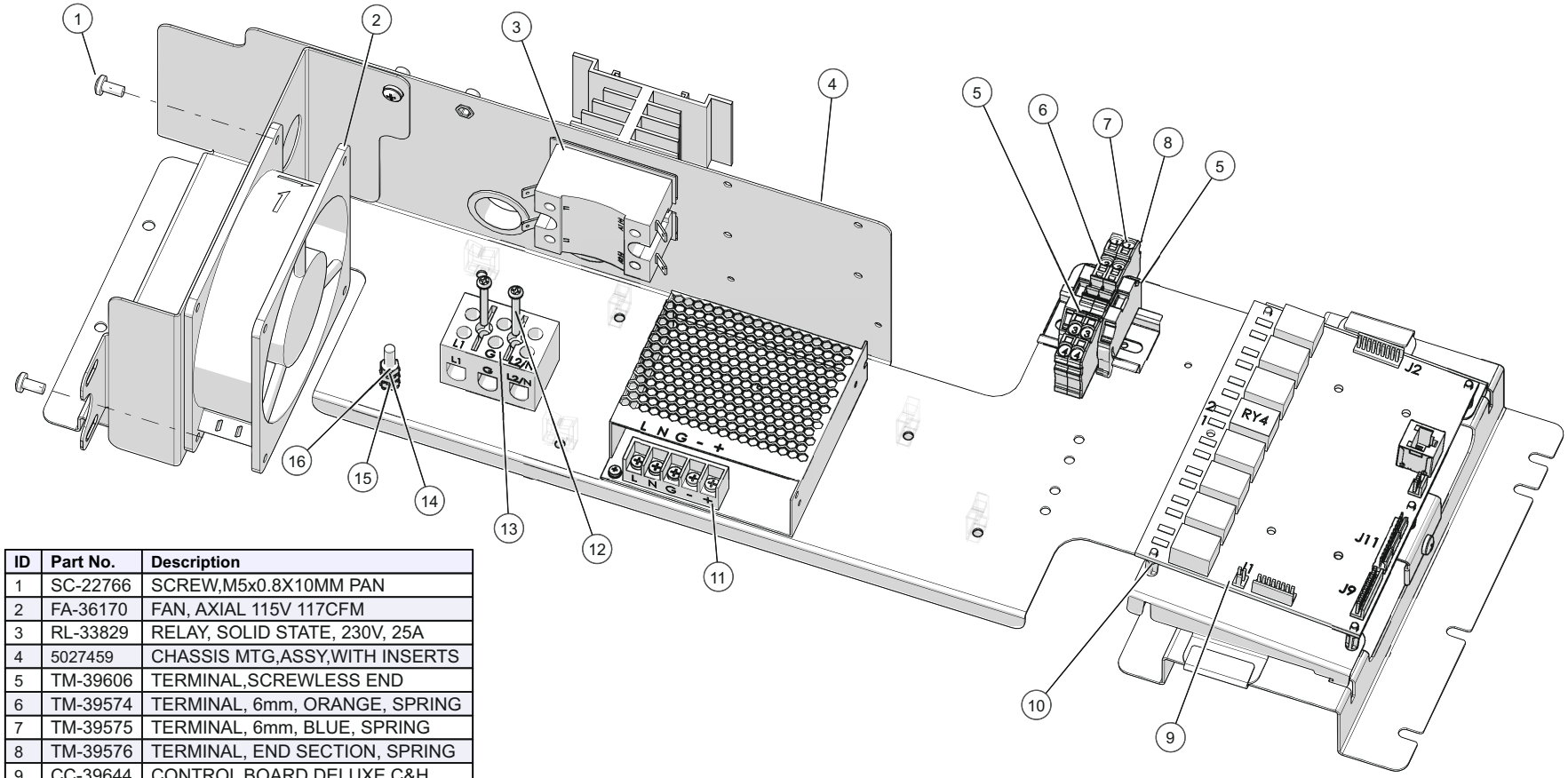

ID	Part No.	Description
1	SC-22766	SCREW,M5x0.8X10MM PAN
2	FA-36170	FAN, AXIAL 115V 117CFM
3	RL-33829	RELAY, SOLID STATE, 230V, 25A
4	5027459	CHASSIS MTG,ASSY,WITH INSERTS
5	TM-39606	TERMINAL,SCREWLESS END
6	TM-39574	TERMINAL, 6mm, ORANGE, SPRING
7	TM-39575	TERMINAL, 6mm, BLUE, SPRING
8	TM-39576	TERMINAL, END SECTION, SPRING
9	CC-39644	CONTROL BOARD,DELUXE,C&H
10	SP-39372	SPACER, LOCK-IN SUPPRT
11	BA-38586	BOARD, POWER SUPPLY, 12V
12	SC-2365	SCREW,6-32X1-1/4,NC PHILLIPS
13	BK-3019	T-BLOCK
14	NU-36234	NUT, M5, KEPS
15	WS-2467	WASHER, INT. LOCK
16	SC-38128	SCREW,PAN PH, METRIC, M5

Electrical Chassis,208-240V, 230V, 300 Series

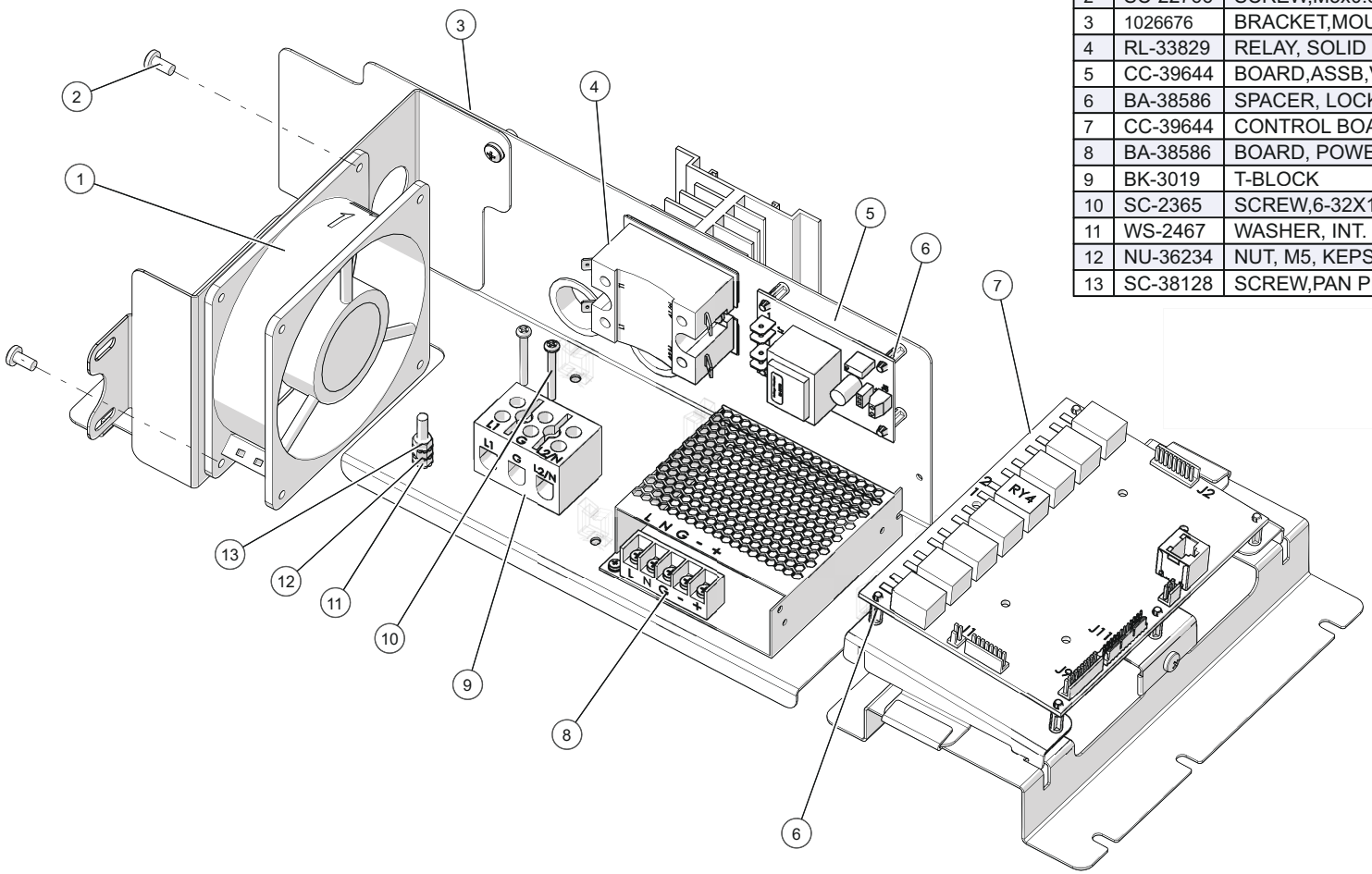

ID	Part No.	Description
1	FA-36957	FAN,230V,MECHATRONICS,HI-TEMP
2	SC-22766	SCREW,M5x0.8X10MM PAN
3	1026676	BRACKET,MOUNTING,ELEC CHASSIS
4	RL-33829	RELAY, SOLID STATE, 230V, 25A
5	CC-39644	BOARD,ASSB,VOLTAGE MONITOR
6	BA-38586	SPACER, LOCK-IN SUPPRT
7	CC-39644	CONTROL BOARD,DELUXE,C&H
8	BA-38586	BOARD, POWER SUPPLY, 12V
9	BK-3019	T-BLOCK
10	SC-2365	SCREW,6-32X1-1/4,NC PHILLIPS
11	WS-2467	WASHER, INT. LOCK
12	NU-36234	NUT, M5, KEPS
13	SC-38128	SCREW,PAN PH, METRIC, M5

Electrical Chassis,208-240V, 230V, 500 Series

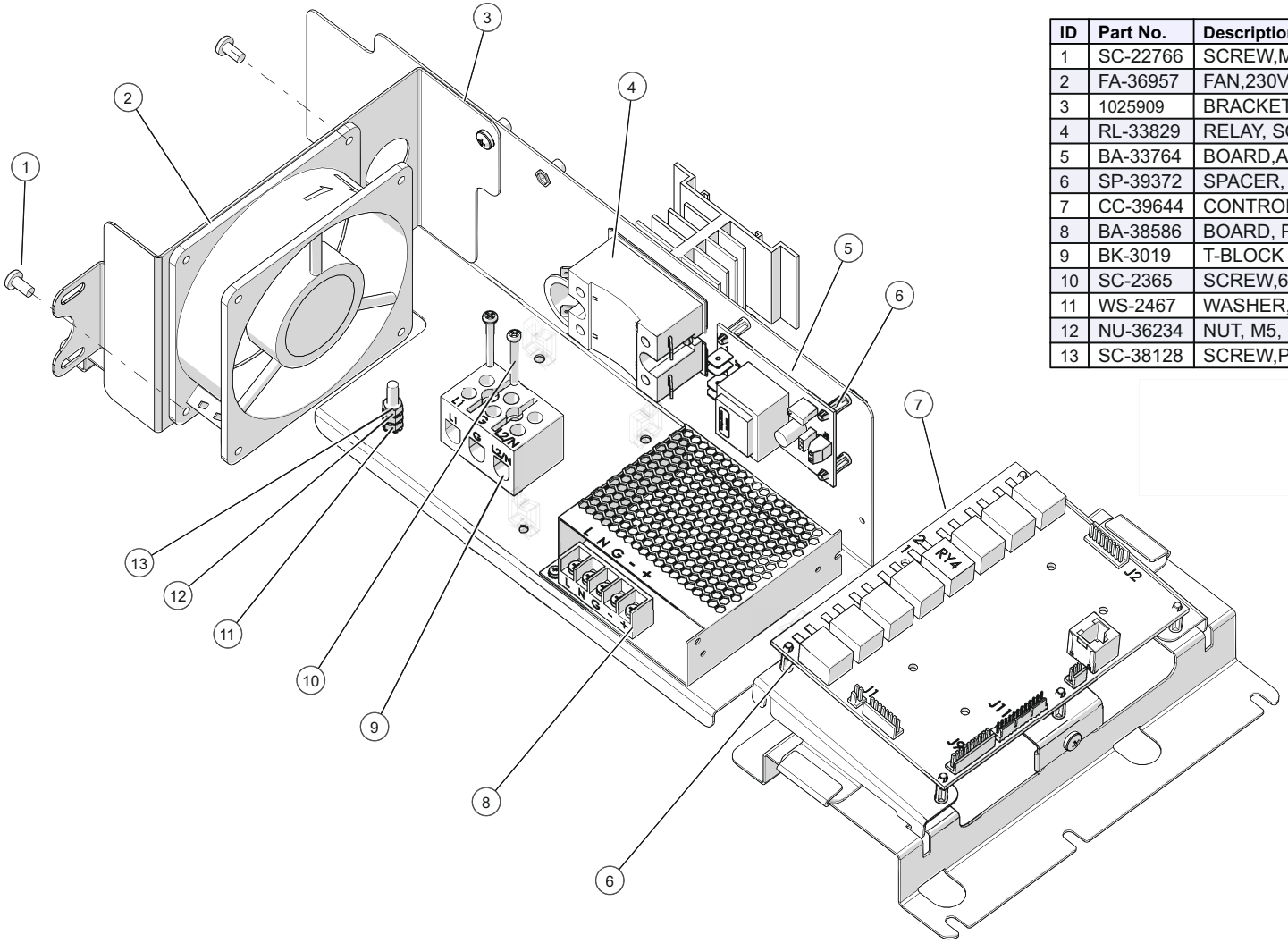

ID	Part No.	Description
1	SC-22766	SCREW,M5x0.8X10MM PAN
2	FA-36957	FAN,230V,MECHATRONICS,HI-TEMP
3	1025909	BRACKET,MOUNTING,ELEC CHASSIS
4	RL-33829	RELAY, SOLID STATE, 230V, 25A
5	BA-33764	BOARD,ASSB,VOLTAGE MONITOR
6	SP-39372	SPACER, LOCK-IN SUPPRT
7	CC-39644	CONTROL BOARD,DELUXE,C&H
8	BA-38586	BOARD, POWER SUPPLY, 12V
9	BK-3019	T-BLOCK
10	SC-2365	SCREW,6-32X1-1/4,NC PHILLIPS
11	WS-2467	WASHER, INT. LOCK
12	NU-36234	NUT, M5, KEPS
13	SC-38128	SCREW,PAN PH, METRIC, M5

Electrical Chassis, 208-240V, 230V, 750/1000 Series

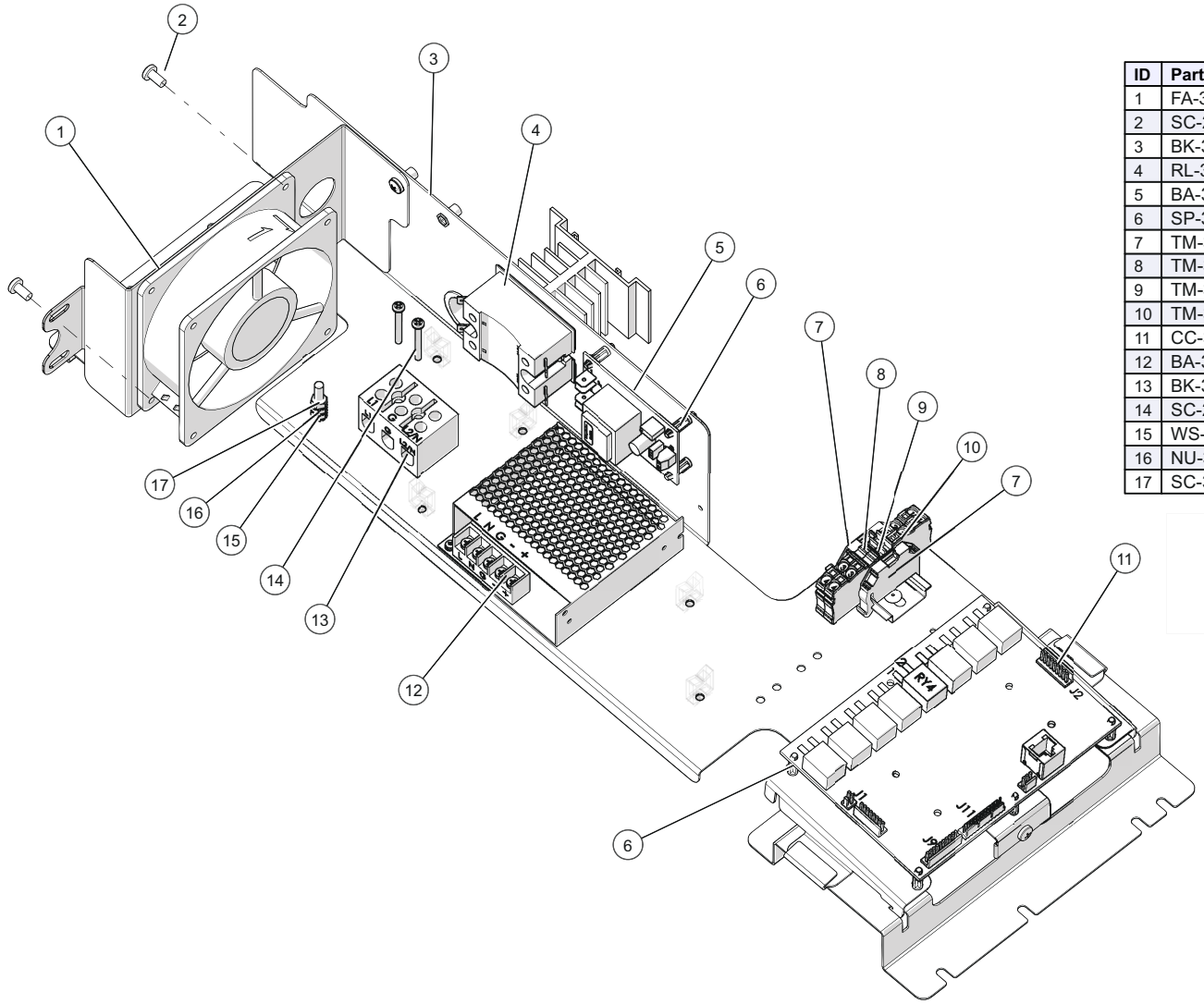

ID	Part No.	Description
1	FA-36957	FAN,230V,MECHATRONICS,HI-TEMP
2	SC-22766	SCREW,M5x0.8X10MM PAN
3	BK-3019	CHASSIS MTG,ASSY,WITH INSERTS
4	RL-33829	RELAY, SOLID STATE, 230V, 25A
5	BA-33764	BOARD,ASSB,VOLTAGE MONITOR
6	SP-39372	SPACER, LOCK-IN SUPPRT
7	TM-39606	TERMINAL,SCREWLESS END
8	TM-39574	TERMINAL, 6mm, ORANGE, SPRING
9	TM-39575	TERMINAL, 6mm, BLUE, SPRING
10	TM-39576	TERMINAL, END SECTION, SPRING
11	CC-39644	CONTROL BOARD,DELUXE,C&H
12	BA-38586	BOARD, POWER SUPPLY, 12V
13	BK-3019	T-BLOCK
14	SC-2365	SCREW,6-32X1-1/4,NC PHILLIPS
15	WS-2467	WASHER, INT. LOCK
16	NU-36234	NUT, M5, KEPS
17	SC-38128	SCREW,PAN PH, METRIC, M5

Electrical Chassis, 208-240V, 230V, 1250/1750 Series

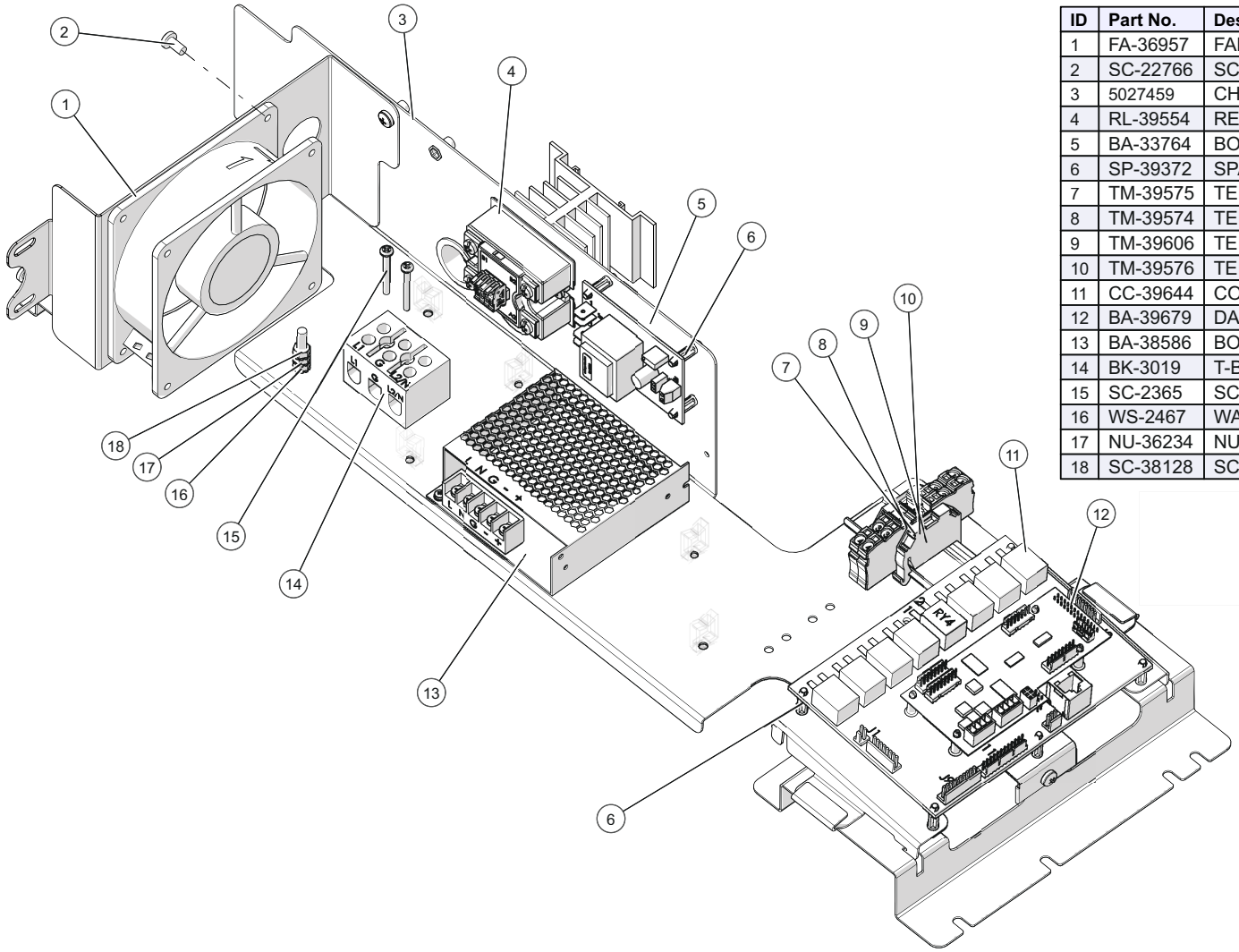

ID	Part No.	Description
1	FA-36957	FAN,230V,MECHATRONICS,HI-TEMP
2	SC-22766	SCREW,M5x0.8X10MM PAN
3	5027459	CHASSIS MTG,ASSY,WITH INSERTS
4	RL-39554	RELAY,SOLID STATE,DUAL,50A
5	BA-33764	BOARD,ASSB,VOLTAGE MONITOR
6	SP-39372	SPACER, LOCK-IN SUPPRT
7	TM-39575	TERMINAL, 6mm, BLUE, SPRING
8	TM-39574	TERMINAL, 6mm, ORANGE, SPRING
9	TM-39606	TERMINAL,SCREWLESS END
10	TM-39576	TERMINAL, END SECTION, SPRING
11	CC-39644	CONTROL BOARD,DELUXE,C&H
12	BA-39679	DAUGHTER BOARD
13	BA-38586	BOARD, POWER SUPPLY, 12V
14	BK-3019	T-BLOCK
15	SC-2365	SCREW,6-32X1-1/4,NC PHILLIPS
16	WS-2467	WASHER, INT. LOCK
17	NU-36234	NUT, M5, KEPS
18	SC-38128	SCREW,PAN PH, METRIC, M5

Electrical Cords, Cord Sets, and Bushings

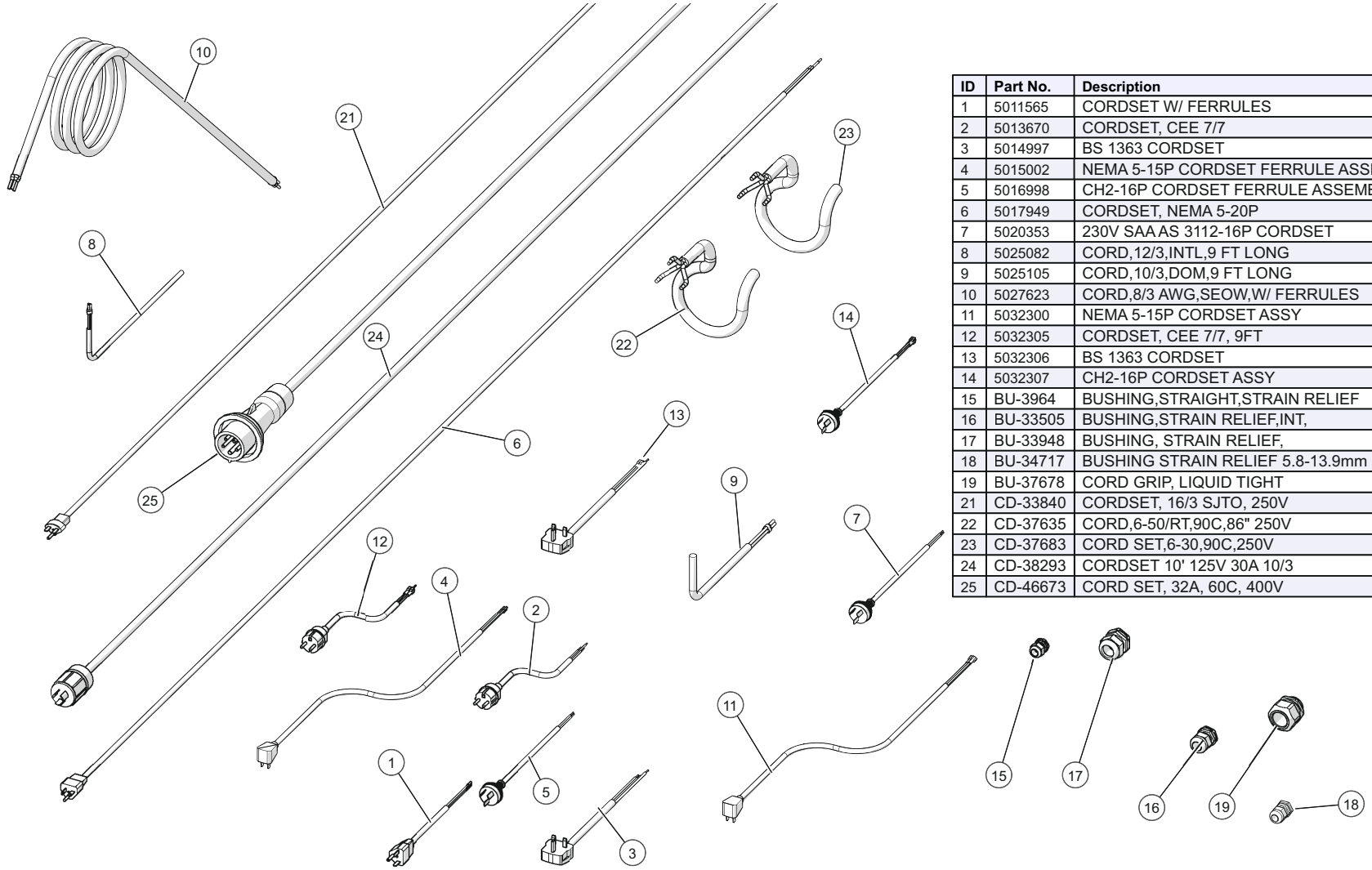

ID	Part No.	Description
1	5011565	CORDSET W/ FERRULES
2	5013670	CORDSET, CEE 7/7
3	5014997	BS 1363 CORDSET
4	5015002	NEMA 5-15P CORDSET FERRULE ASSEMBLY
5	5016998	CH2-16P CORDSET FERRULE ASSEMBLY
6	5017949	CORDSET, NEMA 5-20P
7	5020353	230V SAA AS 3112-16P CORDSET
8	5025082	CORD,12/3,INTL,9 FT LONG
9	5025105	CORD,10/3,DOM,9 FT LONG
10	5027623	CORD,8/3 AWG,SEOW,W/ FERRULES
11	5032300	NEMA 5-15P CORDSET ASSY
12	5032305	CORDSET, CEE 7/7, 9FT
13	5032306	BS 1363 CORDSET
14	5032307	CH2-16P CORDSET ASSY
15	BU-3964	BUSHING,STRAIGHT,STRAIN RELIEF
16	BU-33505	BUSHING,STRAIN RELIEF,INT,
17	BU-33948	BUSHING, STRAIN RELIEF,
18	BU-34717	BUSHING STRAIN RELIEF 5.8-13.9mm
19	BU-37678	CORD GRIP, LIQUID TIGHT
21	CD-33840	CORDSET, 16/3 SJTO, 250V
22	CD-37635	CORD,6-50/RT,90C,86" 250V
23	CD-37683	CORD SET,6-30,90C,250V
24	CD-38293	CORDSET 10' 125V 30A 10/3
25	CD-46673	CORD SET, 32A, 60C, 400V

Cables and Cable Wraps

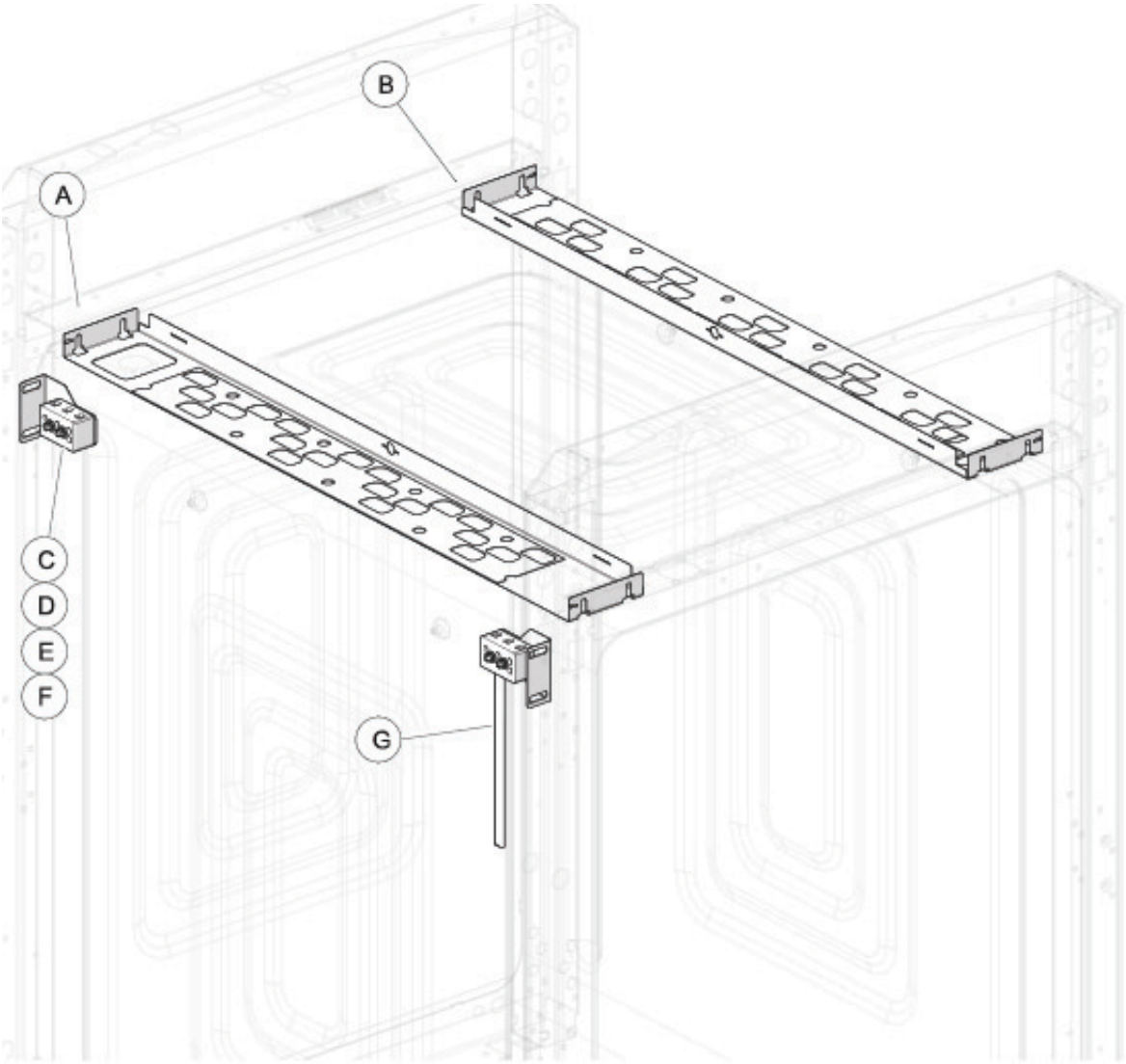

Spot Cable Hanger Part Numbers

Unit	Voltage	A	B
500-TH	120V	5028006	5028079
500-TH	208/240/230V	5028006	5029043
750-TH	120V	5026077	5026190
750-TH	208/240/230V	5026077	5026190
1000-TH	120V	5028078	5028076
1000-TH	208/240/230V	5026077	5026190
1200-TH (UK)	230V	5026190	5026077
1200-TH	208/240/230V	5026190	5026077
1750-TH	208/240/230V	5026077	5026190

Common Parts

ID	Part No.	Description
C	5027549	Assembly, Cable Term Brkt w/Studs
D	BK-39664	Terminal Block, 300V AC/DC
E	NU-35846	Nut, Keps, M3 x 0.5, SS
F	WS-22293	Washer, Flat
G	CB-3045	Cable, Heating, 450°C

Cable Wrap Kits (one per cavity)

Unit	Voltage	Cable Kit P/N	Cable Length
500-TH	120V	4879	112 ft (34m)
500-TH	208/240/230V	4880	134 ft (41m)
750-TH	120V	4880	134 ft (41m)
750-TH	208/240/230V	4881	210 ft (64m)
1000-TH	120V	4879	112 ft (34m)
1000-TH	208/240/230V	4881	210 ft (64m)
1200-TH (UK)	230V	4880	134 ft (41m)
1200-TH	208/240/230V	4881	210 ft (64m)
1750-TH	208/240/230V	4881	210 ft (64m)

Probe Packages

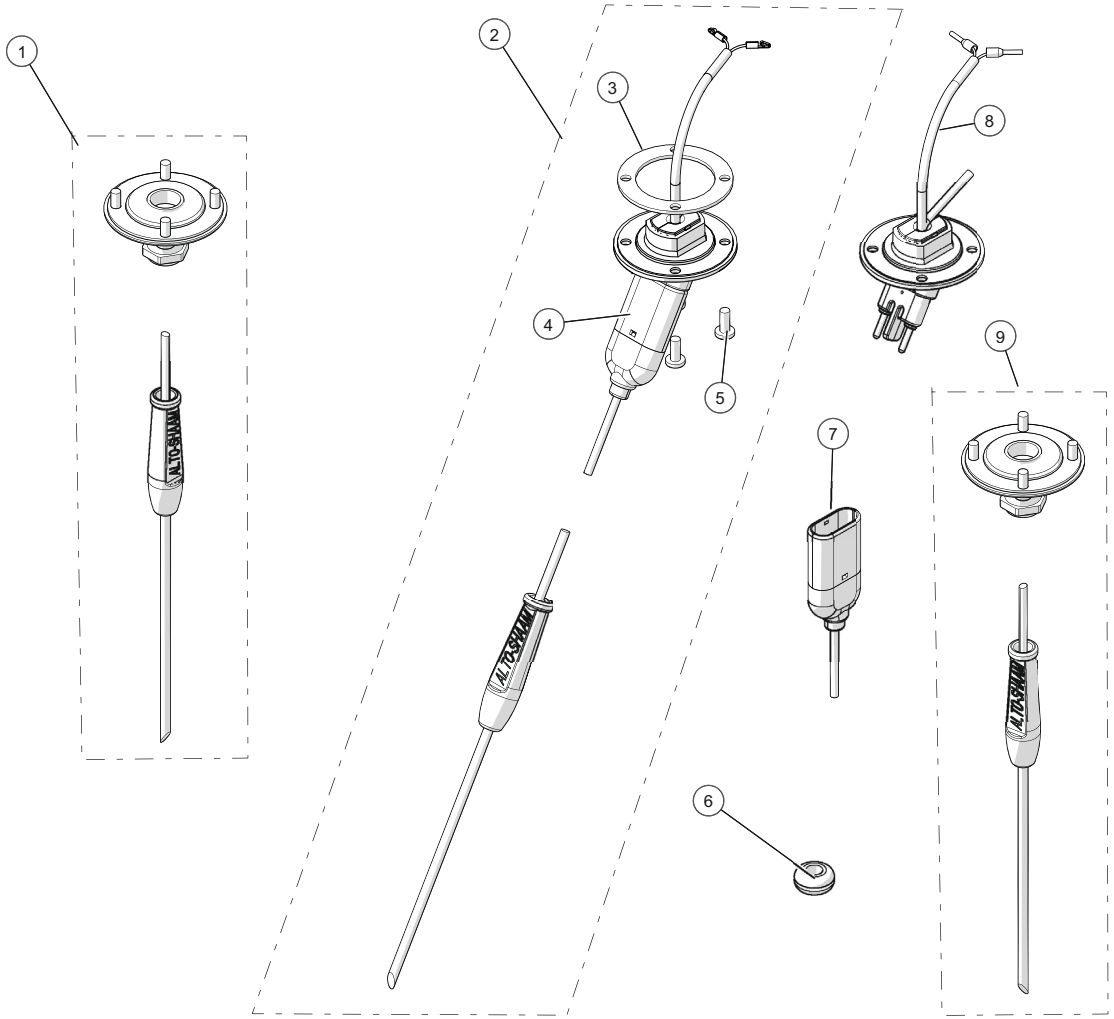

ID	Part No.	Description
1	5017133	COMBI PROBE PKG, MULTIPOINT
2	5029651	PROBE PKG, DETACHABLE, STANDARD
3	GS-35796	GASKET, CAVITY PROBE
4	PR-46999	PROBE, QUICK RELEASE, 820MM, LOW TEMP
5	SC-22273	SCREW,M4x0.7X10MM PAN
6	BU-46340	BUSHING,7/16" DIA. HI-TEMP
7	PR-36576	PROBE, SOUS VIDE, 1000MM
8	PR-35771	PROBE, RECEPTACLE, 1300mm
9	5017972	COMBI PROBE PKG, MULTIPOINT
10	5016130	PROBE PLUG PKG,CTC/CTP MARINE
11	SC-23664	SCREW, M4x0.7x10MM HEX
12	1014297	FOOD PROBE COVER PLATE, COMBI
13A	PR-46998	PROBE, QUICK RELEASE, 820MM, TE, LOW TEMP
13B	PR-37156	PROBE, QUICK RELEASE, 1600MM
13C	PR-37157	PROBE, QUICK RELEASE, 1000MM
13D	PR-37158	PROBE, QUICK RELEASE, 820MM

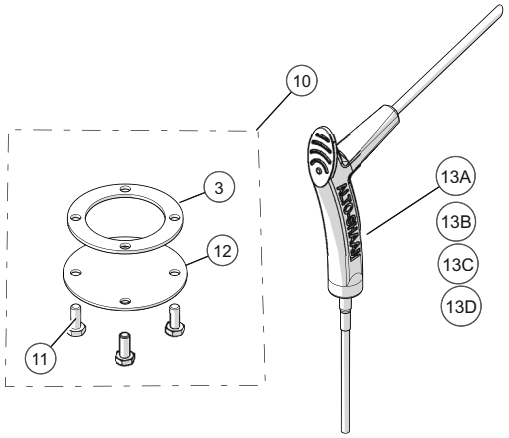

Smoker Elements

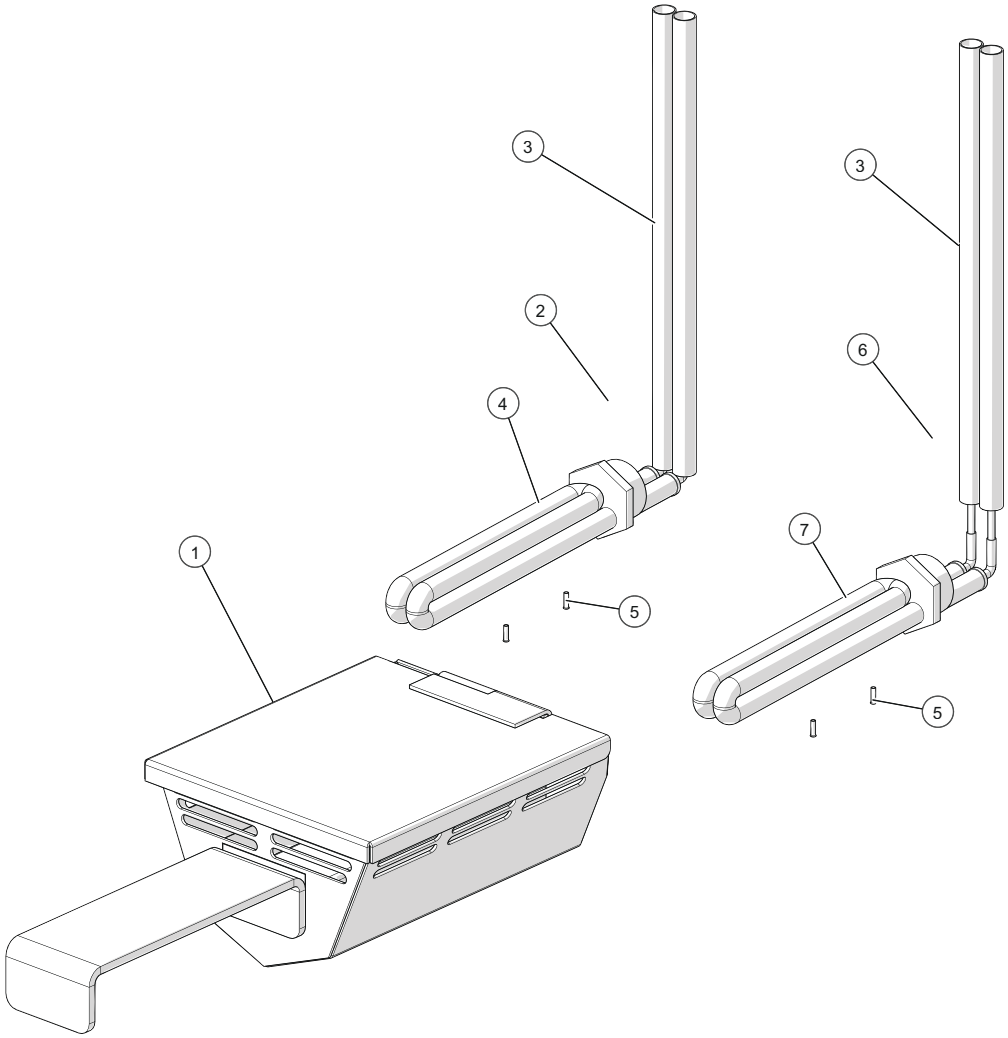

ID	Part No.	Description
1	4652	CHIP TRAY
2	5025683	SMOKER ELEMENT ASSY, 208-240
3	1025008	SLEEVE, INSULATION,7.00" LG
4	EL-38104	ELEMENT, SMOKER, 240V, 350W
5	CR-34827	CONNECTOR, FERRULE #18
6	5025684	SMOKER ELEMENT ASSY, 120V
7	EL-38532	ELEMENT, SMOKER, 120V, 250W

Extended Drip Trays

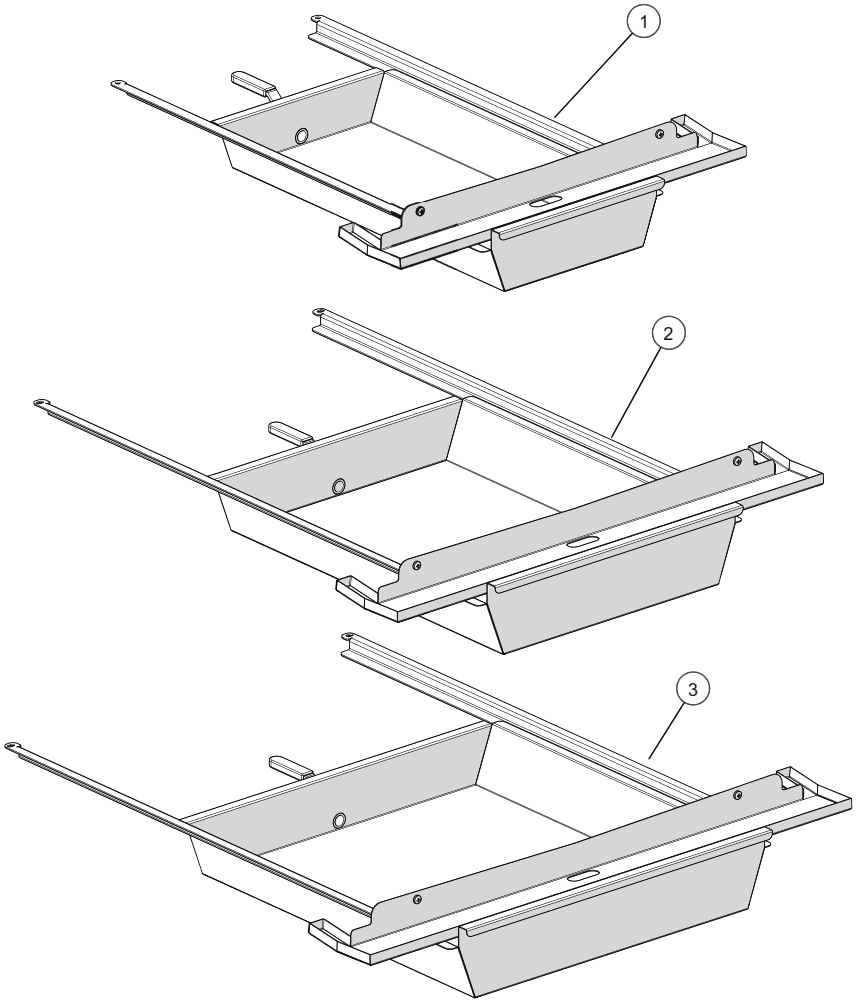

ID	Part No.	Description
1	5030665	TRAY,DRIP,EXTENDED, 500 SERIES
2	5030659	TRAY,DRIP,EXTENDED, 1000/1200 SERIES
3	5030664	TRAY,DRIP,EXTENDED, 750/1750 SERIES

Bumpers

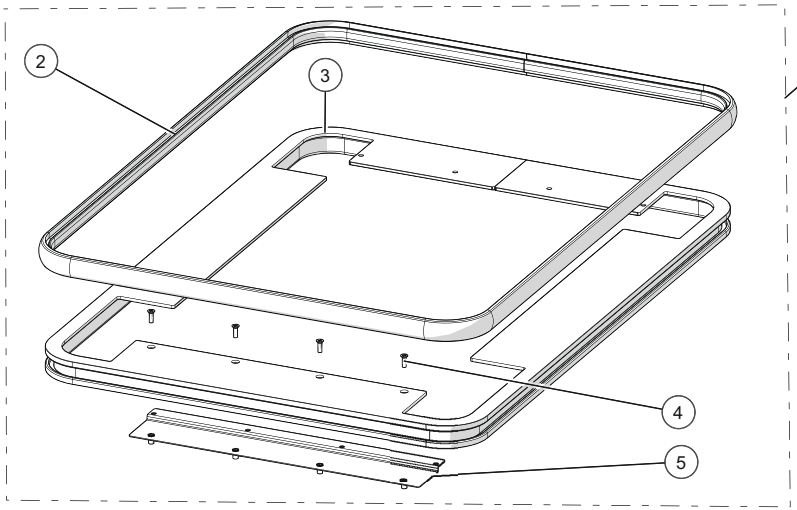

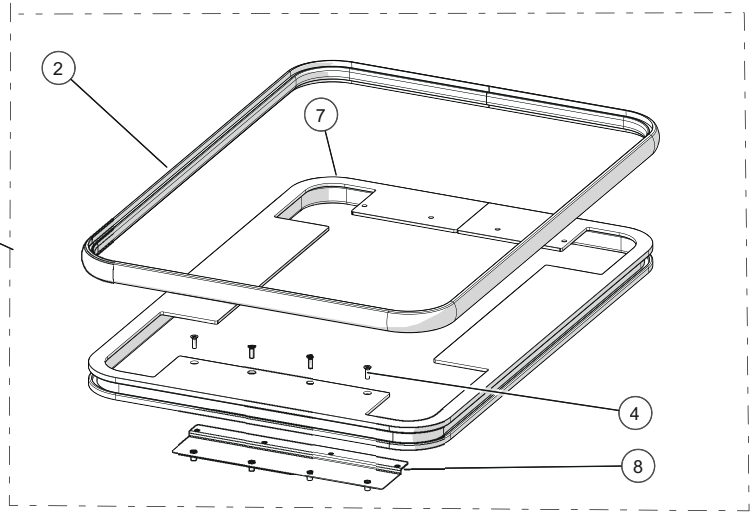

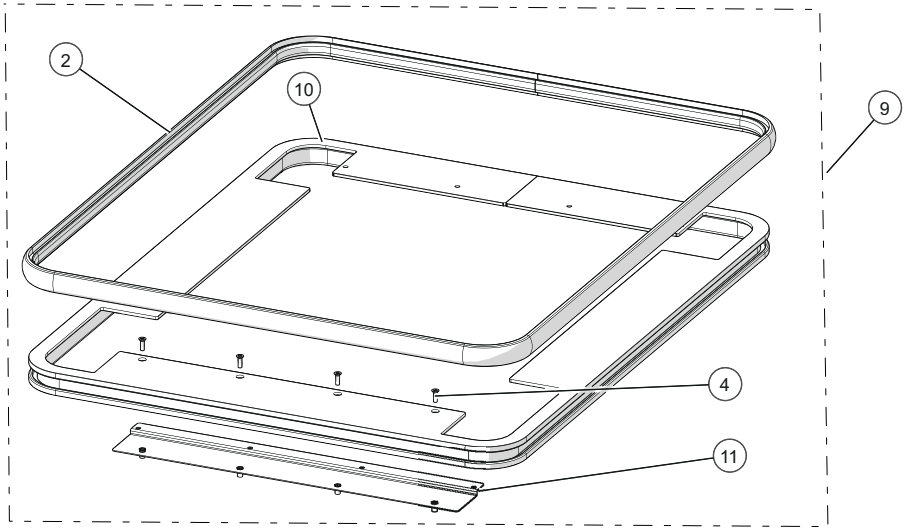

ID	Part No.	Description
1	5028258	ASSY,BUMPER PKG,1000/1200, 3-1/2" CASTERS
2	BM-24766	BUMPER, PERIMETER, RUBBER
3	BM-46293	BUMPER,C&H,1000/1200 SERIES
4	SC-22281	SCREW,M5x0.8X16MM FLAT
5	1029785	BRACKET, MOUNTING,BUMPER, 1000/1200
6	5028259	ASSY,BUMPER PKG,500, 3-1/2" CASTERS
7	BM-46299	BUMPER,C&H,500 SERIES
8	1029869	BRACKET, MOUNTING, BUMPER, 500
9	5028260	ASSY,BUMPER PKG,750/1750, 3-1/2" CASTERS
10	BM-46300	BUMPER,C&H,750/1750 SERIES
11	1029870	BRACKET, MOUNTING, BUMPER, 750/1750

Caster and Leg Assemblies

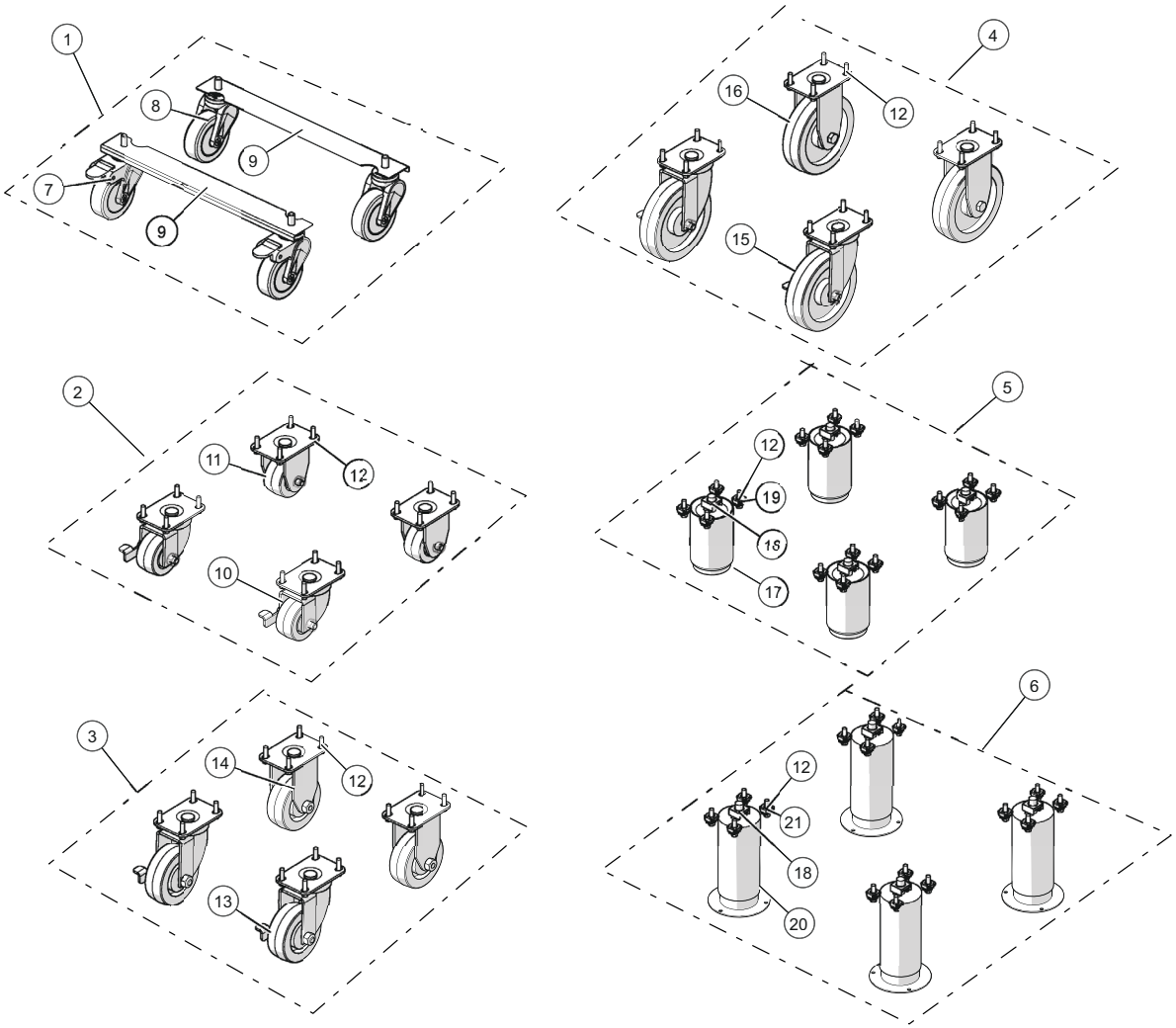

ID	Part No.	Description
1	5029959	300 SERIES 3" CASTER OPTION
2	5027134	CASTER PACKAGE "C", 2-1/2"
3	5027133	CASTER PACKAGE "B", 3-1/2"
4	5027112	CASTER PACKAGE "A", 5"
5	5032092	LEG PACKAGE "A", 3.9"-6.42"
6	5032093	LEG PACKAGE "B", SEISMIC
7	CS-29499	CASTER, 3" SWIVEL W/ BRAKE
8	CS-29500	CASTER, 3" SWIVEL
9	1032533	STIFFENER,BOTTOM
10	CS-39969	CASTER,PLATE,SWIVEL,BRAKE,2.5"
11	CS-39968	CASTER, PLATE, RIGID, 2.5"
12	SC-28256	SCREW, M6X1X20MM HEX FLG
13	CS-39971	CASTER,PLATE,SWIVEL,BRAKE,3.5"
14	CS-39970	CASTER, PLATE, RIGID, 3.5"
15	CS-39973	CASTER,PLATE,SWIVEL,BRAKE, 5"
16	CS-39972	CASTER, PLATE, RIGID, 5"
17	LG-29644	LEG, 4" ADJUSTABLE
18	NU-37699	NUT, CAGE M12 X 1.75 THREAD
19	NU-46405	NUT, CAGE, M8 X 1.25
20	FT-29080	FEET, SEISMIC FLANGE, TABLE TOP
21	NU-46405	NUT, CAGE, M8 X 1.25

ALTO-SHAAM ASIA
Shanghai, China
Phone +86-21-6173 0336

ALTO-SHAAM CANADA
Concord, Ontario Canada
Toll Free Phone 866-577-4484
Phone +1-905-660-6781

ALTO-SHAAM CENTRAL & SOUTH AMERICA
Miami, FL USA
Phone +1-954-655-5727

ALTO-SHAAM MIDDLE EAST & AFRICA
Dubai, UAE
Phone +971 4 321 9712

ALTO-SHAAM MEXICO
Phone +52 1 477-717-3108

ALTO-SHAAM FRANCE, L.L.C.
Aix en Provence, France
Phone +33(0)4-88-78-21-73

ALTO-SHAAM GMBH
Bochum, Germany
Phone +49(0)234-298798-0

ALTO-SHAAM RUSSIA
Moscow, Russia
Phone +7-903-793-2331

ALTO-SHAAM

Menomonee Falls, WI 53052-0450, U.S.A.
Telephone 800-558-8744 | +1-262-251-3800 | alto-shaam.com