TRUE REFRIGERATION INTERNATIONAL
UK Tel +44 (0) 1709 888 080 • Germany Tel +49 (0) 7622 6883 0
Free Phone to U.S. 0 800 894 928 • www.truemfg.com

MADE WITH INNOVATION IN THE USA

9/19

Model:
T-19-HC

T-Series:
Reach-In Solid Swing Door Refrigerator with Hydrocarbon Refrigerant

T-19-HC

- True's solid door reach-in's are designed with enduring quality that protects your long term investment.
- Designed using the highest quality materials and components to provide the user with colder product temperatures, lower utility costs, exceptional food safety and the best value in today's food service marketplace.
- Factory engineered, self-contained, capillary tube system using environmentally friendly R290 hydro carbon refrigerant that has zero (0) ozone depletion potential (ODP), & three (3) global warming potential (GWP).
- High capacity, factory balanced refrigeration system that maintains cabinet temperatures of 33°F to 38°F (.5°C to 3.3°C) for the best in food preservation.
- Stainless steel solid door and front. The very finest stainless with higher tensile strength for fewer dents and scratches.
- Adjustable, heavy duty PVC coated shelves.
- Positive seal self-closing door. Lifetime guaranteed door hinges and torsion type closure system.

Bottom mounted units feature:

- "No stoop" lower shelf.
- Storage on top of cabinet.
- Compressor performs in coolest, most grease free area of kitchen.
- Easily accessible condenser coil for cleaning.

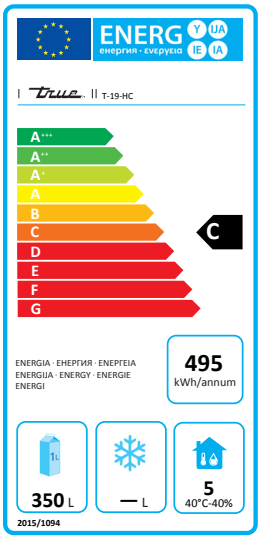

PLAN VIEW

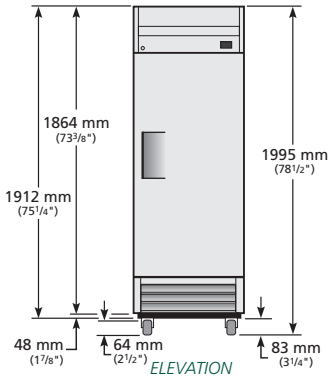

ELEVATION

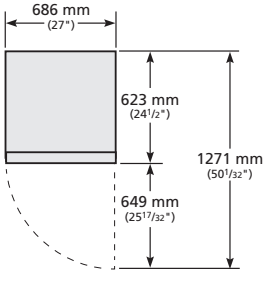

PLAN VIEW

ROUGH-IN DATA

Specifications subject to change without notice.
Chart dimensions rounded up to the next whole millimeter (inches rounded up to the next ⅛").

Model	Model Type	Doors	Shelves	Cabinet Dimensions (mm)			Net Volume (litres)	EEC	EEI	24 hr/ Energy Consumption (kWh)	Annual Energy Consumption (kWh)	Crated Weight (kg)
				W	D	H						
T-19-HC	Vertical Chilled	1	4	686	623	1995	350	C	41.8	1.356	495	112